Haier Commercial Air Conditioning

ADDRESS
No.1 Haier Road, Hi-tech Zone, Qingdao 266101 P.R.China

CONTACTS
Tel: +86-532-8893-6938
B2B Website: www.haierac.com
B2C Website: www.haier.com

Haier

2017 General Catalogue

Chiller 50Hz R410a/R134a/R22

Nov.2016

Version 2.0

Haier

Chiller

50Hz R410a/R134a/R22

2017 General Catalogue

Haier Commercial Air Conditioning

Haier B2B Platform

The Haier Air-conditioning dealer portal (www.haierac.com) is a platform to help Haier distributors, installer and professional personnels better understand and make business with Haier globally.

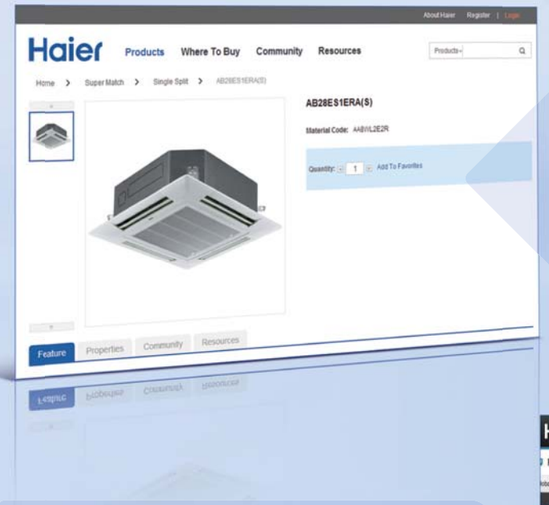

The portal becomes the official new product release channel, offering the latest materials of Haier A/C products with high resolution pictures, project reference to help our business partners understand how our solutions help the end users globally.

This platform offers an opportunity for our business partners to share projects, applications and other exciting stories with Haier.

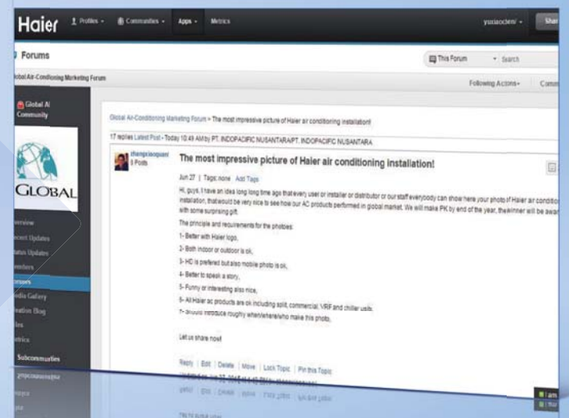

This platform offers a community environment for our business partner to attain valuable resources, including catalogue, brochures, leaflat and other marketing documents. Moreover, the platform is a convenient place where all business partners can communicate with Haier directly.

http://www.haierac.com

Haier Brand Story

The Internet era is a diverse and unconventional time, where “one size fits all” products and solutions simply aren’ t enough. Customers want to be treated as individuals and respected for who they are.
Everyone wants their unique lifestyle acknowledged. That is why Haier listens closely to you in order to gain a genuine understanding of what is going on in your life and what is on your mind. So each of you can get the smart home experience you deserve: be it simple, sophisticated, organized or enjoyable.
As a worldwide industry leader, Haier innovates beyond products and solutions and turns the organization into a wholly connected platform. In doing so, internal and external resources are connected quickly and easily. We believe only by doing so, we can best meet our consumers’ expectations in this rapidly evolving world.
Be part of the Haier Network. Create new possibilities.

Haier Global Network

Haier has built up its infrastructures globally to meet the customers' quick evolving demands, including R&D centers, production facilities, trading companies and sales networks etc.
Haier's five R&D centers around the world have forged strategic partnerships with first-class suppliers, research institutions, and prestigious universities to create an innovative ecosystem composed of internal and external scientists and engineers connected by virtual and physical networks.

Worldwide Network	Overseas	Global
Trading Company	24	66
R&D Center	4	5
Manufactory	24	24
Industry Park	7	21
Sales Network	37.683	143.330

Haier Global Revenue

Established in 1984, Haier is the world's No. 1 major appliance brand. In the Internet age, Haier aims to become a Networked Enterprise and its global revenue reaching 30.2 billion USD in 2015.

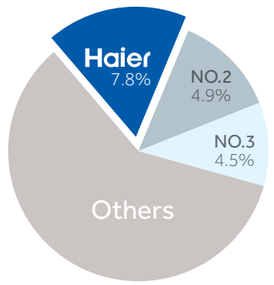

Haier has been honored as the world’ s largest home appliance brand with a 9.8% retail volume share in 2015 marketing for seven consecutive years.(Data source: Euromonitor)

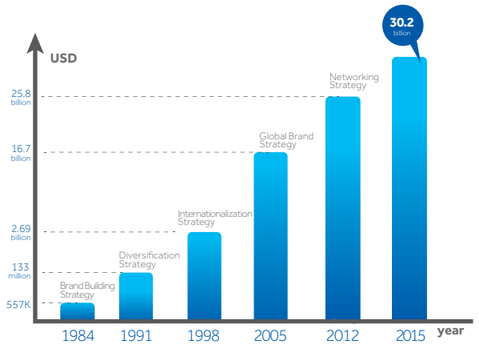

Haier AC Milestones

Brief of R&D Center

Setting New Standards: Haier's new state of the art HVAC R&D Center commences operation in March, 2014

Driving across the world's longest bridge into the beautiful coastal city of Qingdao and taking the off-ramp to the massive Haier Industrial Park, you will find the world's most advanced HVAC R&D center and its adjacent height drop testing facility towering over other buildings in the park. The commencement of the R&D center puts Haier in the leadership position to provide the best HVAC product solutions suitable for different climates and environments around the globe.

Entering the lobby you will be awed by the installation and display of Haier's world leading magnetic bearing oil free centrifugal chiller that cools the building. Also in display are Haier's latest innovation of residential and commercial products and BMS control solutions.

The 6 story buildng houses 1,000 plus experienced engineers and technicians, and is equipped with 120 test labs. From psychrometric labs that accurately measure product capacity and efficiency to acoustic labs that reduces sound level; from environment simulators to sustainability test labs that ensure product reliability under the harshest ambient conditions, Haier engineers work hand in hand with international team of experts to turn out green and user friendly climate control solutions.

The height drop test tower, standing 106 meters tall, is the tallest test tower of its kind. It allows Haier's latest MRV products to test under all kinds of installation scenarios.

The stage is set, and Haier is ever more ready to provide global customers with world class products. The new R&D Center is the testament of Haier's commitment and vision in being the leading player in the global HVAC industry.

Global Manufacturing Capacity

Domestically, Haier AC is running 9 factories, 1 of which is MHAQ, a JV between Haier and Mitsubishi Heavy. In overseas markets, Haier is running 7 manufacturing plants.
With all these factories, Haier AC has a product capacity amounts to 20.1 million sets per year.

2017 NEW PRODUCT

NEW

22

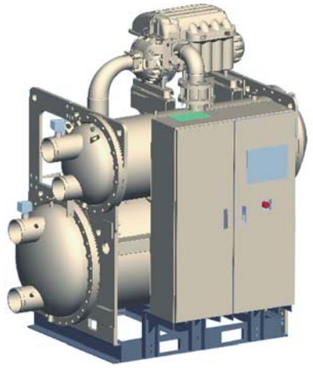

Modular Water Cooled Centrifugal Chiller 320/400/500kW

- falling film evaporator, higher efficiency , lower the refrigerant charge volume ;
- Shell & Tube condenser , more reliable in operation ;
- Condenser , evaporator , control cabinet can be dismantled , product can be put into the elevator ;
  * Product can be modular connected for bigger capacity application ;

37

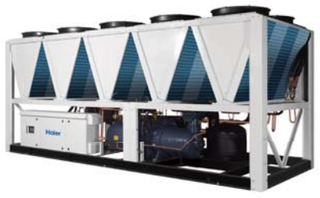

R134a Air Cooled Screw Chiller (cooling only) 360-2400kW

- Cooling only products are fit for the application which only need cooling operation;
- Twin –screw compressor,25%/50%/75%/100% adjustment in capacity;
- Plate exchanger sub cooling design for another 18 degree cooling in high pressure side;
- 3810 steps EEV
- 52 degree high temperature in cooling

62

R134a Water Cooled Screw Chiller 350-1350kW

- Twin –screw compressor,25%/50%/75%/100% adjustment in capacity;
- Flooded type evaporator,high efficiency;
- PLC industrial controller;

92

R410a Air Cooled Modular Chiller 100kW

- New 100kw models , give more flexibility in combination , basic model from 30/65/130 kw three model to 30/65/100/130kw four model, so combination possibility extend to 200/230kw etc ,also can boost the price competitiveness in combination ;

108

New Chilled Water Compact Cassette 340/510 m^3/h

- 570*570*260mm dimension suits for the standard decoration panel ;
- Installer just open the decoration panel to finish the installation , easy for installer work;

99

Three Way Valve Suit for fan coil / chilled water cassette

- For energy saving purpose , we developed three way valve which can match fan coil and chilled water cassette ;

CONTENTS

Chiller
R410a/R134a/R22

AIR-COOLED CHILLER LINE UP

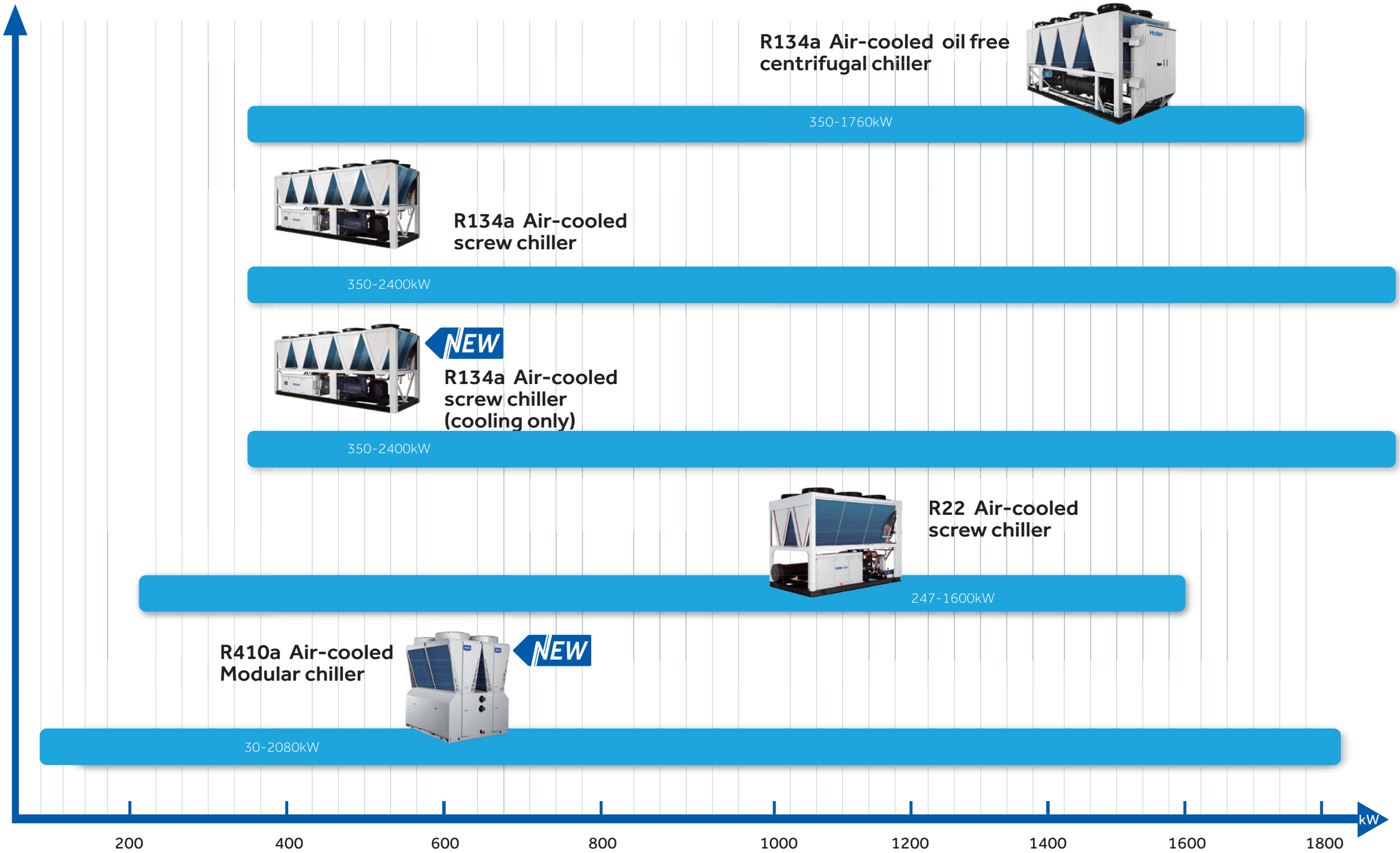

WATER-COOLED CHILLER LINE UP

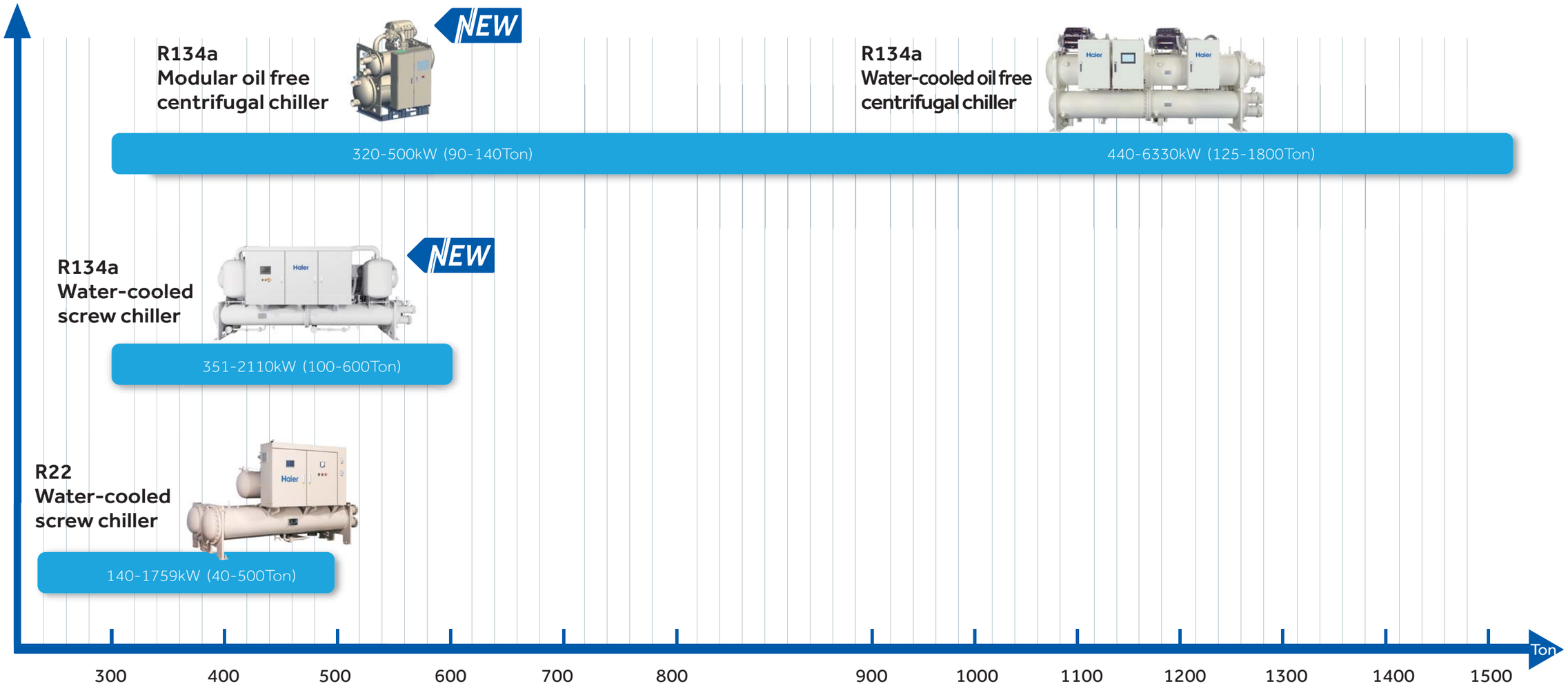

FAN COIL LINE UP

FCE | 2.4-13.2kW
340-2380 m³/h
12/30/50Pa optional

NEW

3VFCE

NEW

FCB | 2.7-3.5kW
340-510 m3/h

FCB | 3.6-12.6kW
400-2380 m³/h

NEW

3VFCB

OIL FREE CENTRIFUGAL CHILLER

OIL FREE CENTRIFUGAL CHILLER

High Efficiency

Energy saving and high efficiency

The unit adopts the turbo inverter compressor technology and frictionless technology, which will enhance the energy efficiency greatly. Water cooled series IPLV(integrated part-load value AHRI standards) can be 11.98(Air-cooled series IPLV is 6.0). Comparing with normal centrifugal chiller, Haier centrifugal IPLV is 50% higher.

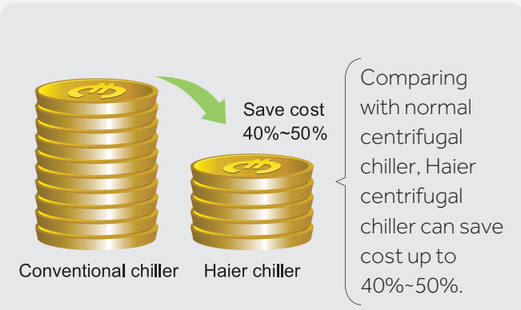

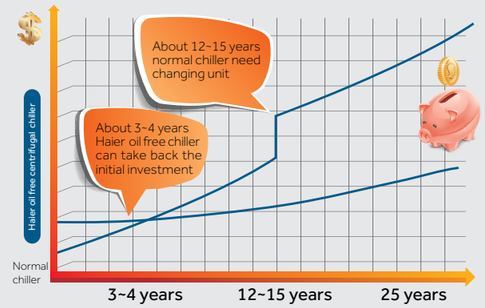

About 3~4 years Haier oil free chiller can take back the initial investment.

High efficient refrigeration cycle system design

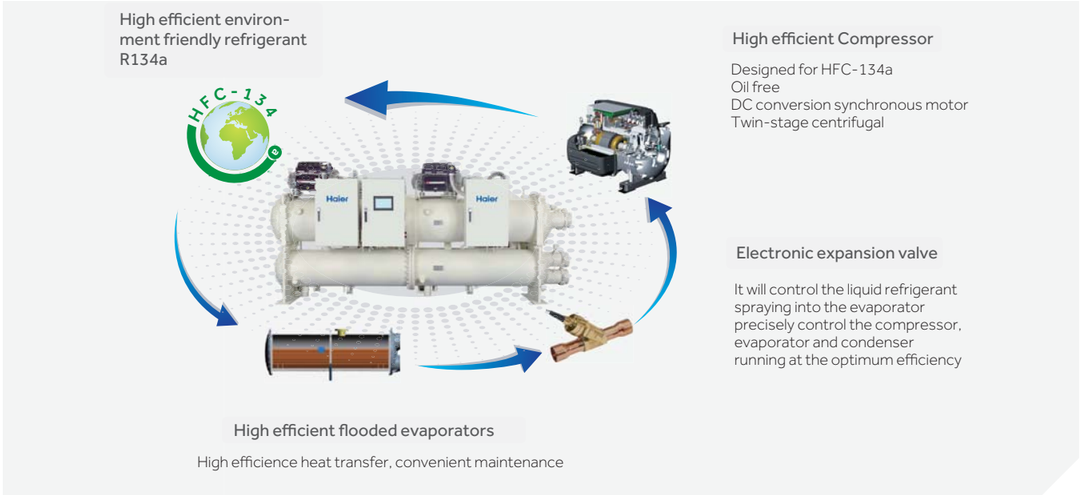

Turbocor compressor technology

The chillers either water-cooled or air-cooled, are designed to optimize the performance of the high efficient danfoss turbocor oil-free centrifugal compressor technology.

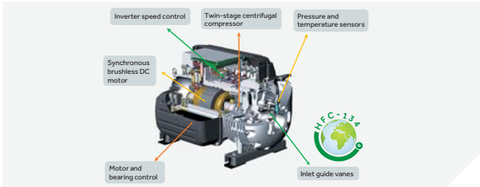

Magnetic bearing technology

Magnetic bearing and orientation sensor: Two radial bearings and one axial bearing compose the digital magnetic bearing system. The movement parts are made of permanent magnet and electric magnet will suspend on the magnet and move without friction. The orientation sensor will confirm the precise position of the rotor at max. 6,000,000 times per minute.

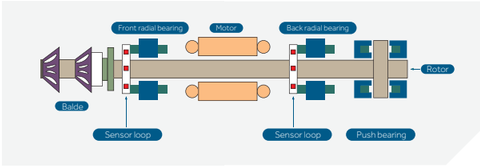

Permanent-magnet motor and Landing bearing

The compressor motor is magnetic permanently, which is supplied voltage by PWM (pulse width management) to realize variable speed running. The landing bearing will go upward before the unit starts up, which will keep a certain distance automatically and ensure no friction.

The radial bearing is to bear the axis after the compressor is powered down, to avoid the touch between the axis and the other metal surface.

OIL FREE CENTRIFUGAL CHILLER

High Efficiency

Frictionless system

The movement parts of magnetic bearing system centrifugal compressor are composed of two radial magnetic bearings and one axial magnetic bearing. so the digital magnetic bearing system will be suspended when compressor is running. the movement parts do not need oil, which avoid that oil film in the heat exchanger lays on the pipe to reduce the heat exchanging efficiency. thus it will ensure the product has the consistent excellent performance in its operation period.

The oil content of old type chiller is 9% on average, which will reduce the efficiency up to 15% to 20%. Haier's magnetic bearing system inverter centrifugal chiller can enhance efficiency over 15% because of oil-free lubrication system.

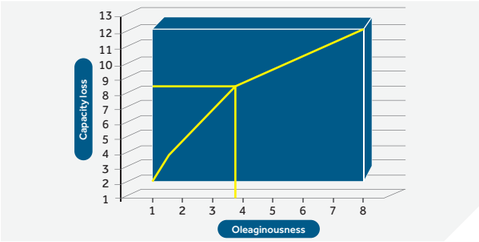

Inverter driving

The inverter centrifugal compressor adopts the integrated driving module. on the condition of condensing temperature decreasing or load reducing, lower the compressor revolution, then optimum the compressor energy efficiency with 5%~100% of rated load.

Optional: digital load balancing valve, compressor even can work normally even when the load almost closes to 0.

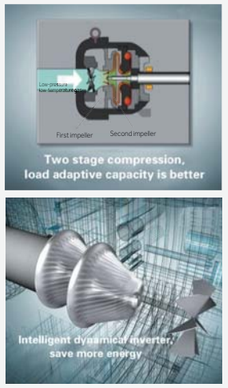

EEV (electronic expansion valve)

Adopt electronic expansion valve. It will control the volume of liquid refrigerant spraying into the evaporator precisely. Adopt the special electronic expansion valve driving module, which will control the stepping motor operation due to the different load, adjust valve open angle, control refrigerant flow volume, and control the compressor, evaporator and condenser running at the optimum efficiency.

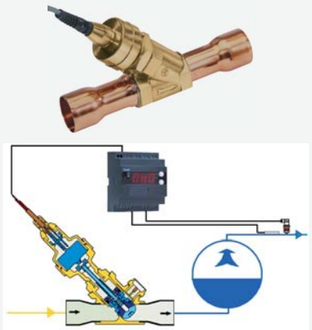

High efficiency heat exchange tube design technology

- The new design adopt high efficiency heat exchange tube.
- The tube adopt special layout make refrigerant flow improvement in the evaporator.

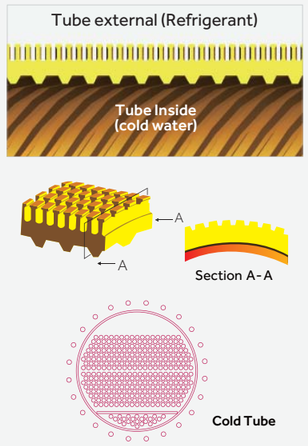

AHRI certificate

All models are qualified for AHRI certificate , so the products capacity and EER are guaranteed.

High Reliability

Long life

Compressor is made from the aerial class aluminum mold and the high strength thermal plastic electronic case, which can keep the compressor long-time and high efficient running.

Aerospace materials and technology, ensure 25 years reliable efficient operation.

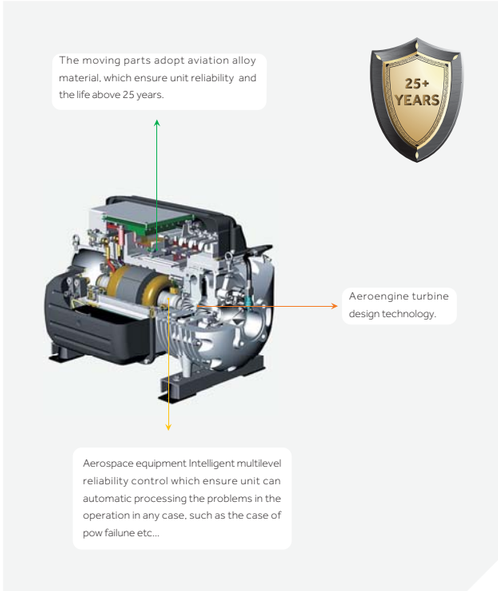

Compressor safe operation

Compressor control module will supply the performance curves and according to the curves, adjust the running speed in time to ensure the compressor running safely.

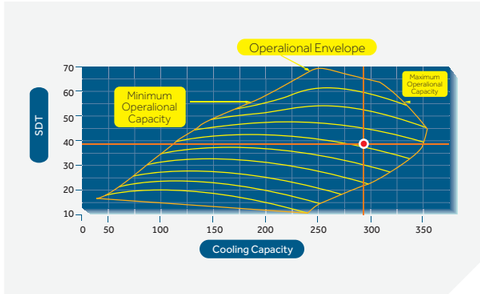

Safety operation

In the case of a power outage, the compressor is fully protected.
Motor becomes a generator and charge capacitors
There is 60 seconds of power reserved in capacitors
Touchdown bearings are used as a back up bearing system for catastrophic failure

Comfort

Flexible capacity adjustment

When condensing temperature goes down or the heat load is decrease, the compressor speed will reduce, the system control the refrigerant output from 2%~100% of the rated load freely, optimize the compressor energy.

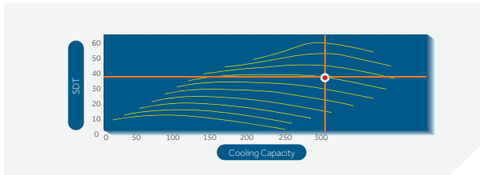

Silence and less vibration, more comfortable

Fully frictionless operation, The device vibration is close to 0. Low running noise. Lower than *70dB(A), while the normal chiller's is higher than 85dB(A). Haier chiller doesn't need the anti-vibration parts.

* For water-cooled model [air-cooled model is 75dB(A)]

OIL FREE CENTRIFUGAL CHILLER

Low Cost

Low installation and maintenance costs

Low start current

Because the bearing adopt magnetic bearing system technology, when the system start up, only 2A current is necessary to suspend the axis, low starting torque, which results in low interference for electricity net. Only 2A start current for single compressor unit. The normal chiller start current can reach 1500A. Because the unit adopt Low start current, the installed don't need soft starter which will save US 80,000 costs.

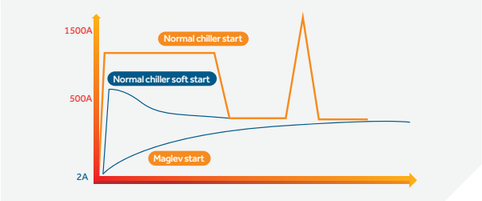

High applicability and low installation costs

The unit adpots 380V power supply, then 10KV power supply is not required. It will be much safer since the examination and approval process are not required either.

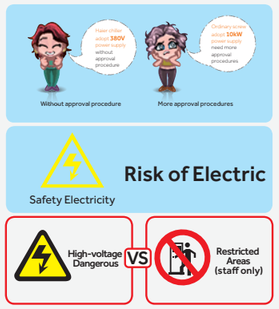

Oil-free system, low maintenance costs

The unit adopts no oil in the chiller means no oil contamination over time, so design efficiency is maintained effortlessly. This design can save as much as US 60,000 maintenance costs during the life cycle.

Convenience

Advanced control system and convenient operation

Big LCD touch screen. Chinese and English are selectable

Calendar

Fault inquires

Water system equipment interlocking

Remote control

Unit operation parameters quick inquiry

BMS function

The unit can realize BMS function; meanwhile, remote control function can be combined with interlock function and timer running function, to realize non-person control.

Easy Installation

Easy to transport

Because the modular oil free centrifugal chiller is compact ,so it easy to transport by the elevator.

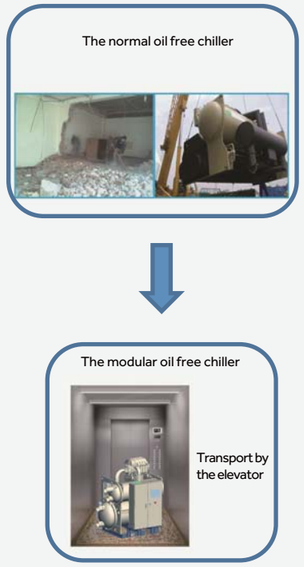

Equipment Principle

Twin-stage compression

The high temperature and high pressure refrigerant will be discharged from the compressor (No.4), and enter the condenser, releasing the heat energy to the cooling water in pipe, then change into the med temperature and high pressure gas (No.5). after passing by the throttle valve, refrigerant turns into the low temperature and low pressure gas. next it enters the evaporator, turning into gas with low temperature and low pressure (No.1) by absorbing the energy from the chilled water (12/7°C) flowing by the pipe in evaporator. after that the gas will be compressed in compressor to turn to high temperature and high pressure liquid and be discharged again.

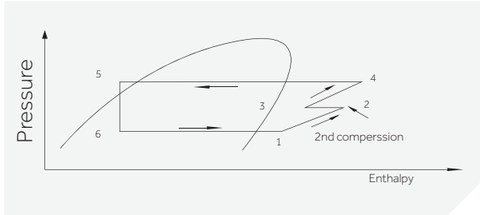

System control principle

The unit will count the air return overheat state due to the air return temperature, then send signal to the control module. the control module will send directly to the centrifugal compressor and the electronic expansion valve. so the centrifugal compressor will adjust the revolution rate, and the electronic expansion valve will adjust the flowing volume. the load control can be adjusted at random, saving energy greatly.

AIR-COOLED OIL FREE CENTRIFUGAL CHILLER

AHRI CERTIFIED®
www.ahridirectory.org

*Picture is based on single compressor model

Model			CC0350PANI	CC0440PANI	CC0700PANI	CC0790PANI	CC0880PANI
Combination			A	B	2*A	A+B	2*B
Cooling capacity		kW	350	440	700	790	880
Total Power input		KW	102	125	203	226	246.5
EER		KW/kW	3.43	3.52	3.45	3.5	3.57
Starting current(Compressor)		A	2	2	2	2	2
Max. running current		A	250	280	500	530	560
Max. power input		KW	148	166	296	314	332
Power supply		Ph/V/Hz	3N/380V/50Hz				
Refrigerant throttle type			Electronic expansion valve				
Capacity control			5%~100%				
Safe protection			compressor overload protection, safe protection, low water flow protection, antifreezing protection,fan motor overload protection,lack of phase protection				
Compressor	Type		Magnetic bearing compressor				
	Quantity		1	1	2	2	2
Refrigerant	Type		R134a				
	Charge	kg	220	255	440	475	510
Air side heat exchanger	Type		High efficiency copper tube+hydroponic alunminum foil				
	Fan typ		Axial fan with low noise				
	Fan quantity		6	8	12	14	16
Water side heat exchanger	Type		Flood type				
	Rated water flow	m^3/h	60	76	120	136	151
	Inlet/outlet pipe	DN	150	150	150	150	150
	Water dirt coefficient	m^2.°C/kW	0.0172				
	Standard pressure	MPa	1				
	Water side resistance	KPa	85	88	86	89	90
External dimension	Unit length	mm	4060	5260	7690	8890	10090
	Unit width	mm	2200	2200	2200	2200	2200
	Unit height	mm	2720	2700	2700	2700	2700
Weight	Net weight	kg	3400	3985	6840	7425	8010
	Gross weight	kg	3450	4050	6940	7540	8140
	Operation weight	kg	3500	4230	7080	7810	8540

Note:
1. Above parameters is based on the standard products;
2. Above products standard pressure is 1.0 Mpa,if pressure higher than 1.0Mpa,should contact with haier technology engineer;
3. Operating ambient temperature range： 15~43℃；
4. Except CC0350PANI/CC0440PANI model,other models are combination ,also separately transport;
5. Due to our policy of innovation some specifications maybe changed without notification;"

AIR-COOLED OIL FREE CENTRIFUGAL CHILLER

AHRI CERTIFIED® www.ahridirectory.org

*Picture is based on single compressor model

Model			CC1050PANI	CC1140PANI	CC1230PANI	CC1320PANI
Combination			3*A	2*A+B	A+2*B	3*B
Cooling capacity		kW	1050	1140	1230	1320
Total Power input		KW	303	325.5	348.5	364.6
EER		KW/kW	3.47	3.5	3.53	3.62
Starting current(Compressor)		A	2	2	2	2
Max. running current		A	750	780	810	840
Max. power input		KW	444	462	480	498
Power supply		Ph/V/Hz	3N/380V/50Hz			
Refrigerant throttle type			Electronic expansion valve			
Capacity control			5%~100%			
Safe protection			compressor overload protection, safe protection, low water flow protection, antifreezing protection,fan motor overload protection,lack of phase protection			
Compressor	Type		Magnetic bearing compressor			
	Quantity		3	3	3	3
Refrigerant	Type		R134a			
	Charge	kg	660	695	730	765
Air side heat exchanger	Type		High efficiency copper tube+hydroponic alunminum foil			
	Fan typ		Axial fan with low noise			
	Fan quantity		18	20	22	24
Water side heat exchanger	Type		Flood type			
	Rated water flow	m³/h	181	196	212	227
	Inlet/outlet pipe	DN	250	250	250	250
	Water dirt coefficient	m².°C/kW	0.0172			
	Standard pressure	MPa	1			
	Water side resistance	KPa	40	42	43	45
External dimension	Unit length	mm	11320	12520	13720	14920
	Unit width	mm	2200	2200	2200	2200
	Unit height	mm	2700	2700	2700	2700
Weight	Net weight	kg	10280	10865	11450	12035
	Gross weight	kg	10430	11030	11630	12230
	Operation weight	kg	10660	11390	12120	12850

Note: 1. Above parameters is based on the standard products;
2. Above products standard pressure is 1.0 Mpa,if pressure higher than 1.0Mpa,should contact with haier technology engineer;
3. Operating ambient temperature range： 15~43℃；
4. Except CC0350PANI/CC0440PANI model,other models are combination ,also separately transport;
5. Due to our policy of innovation some specifications maybe changed without notification;"

AIR-COOLED OIL FREE CENTRIFUGAL CHILLER

AHRI CERTIFIED® www.ahridirectory.org

*Picture is based on single compressor model

Model			CC1400PANI	CC1490PANI	CC1580PANI	CC1670PANI	CC1760PANI
Combination			4A	3*A+B	2*A+2*B	A+3*B	4B
Cooling capacity		kW	1400	1490	1580	1670	1760
Total Power input		KW	400	423.8	445	462.6	482.2
EER		KW/kW	3.5	3.52	3.55	3.61	3.65
Starting current(Compressor)		A	2	2	2	2	2
Max. running current		A	1000	1030	1060	1090	1120
Max. power input		KW	592	610	628	646	664
Power supply		Ph/V/Hz	3N/380V/50Hz				
Refrigerant throttle type			Electronic expansion valve				
Capacity control			5%~100%				
Safe protection			compressor overload protection, safe protection, low water flow protection, antifreezing protection,fan motor overload protection,lack of phase protection				
Compressor	Type		Magnetic bearing compressor				
	Quantity		4	4	4	4	4
Refrigerant	Type		R134a				
	Charge	kg	880	915	950	985	1020
Air side heat exchanger	Type		High efficiency copper tube+hydroponic alunminum foil				
	Fan typ		Axial fan with low noise				
	Fan quantity		24	26	28	30	32
Water side heat exchanger	Type		Flood type				
	Rated water flow	m³/h	241	256	272	287	303
	Inlet/outlet pipe	DN	250	250	250	250	250
	Water dirt coefficient	m².°C/kW	0.0172				
	Standard pressure	MPa	1				
	Water side resistance	KPa	75	78	80	86	90
External dimension	Unit length	mm	14950	16150	17350	18550	19750
	Unit width	mm	2200	2200	2200	2200	2200
	Unit height	mm	2700	2700	2700	2700	2700
Weight	Net weight	kg	13800	14385	14970	15555	16140
	Gross weight	kg	14000	14600	15200	15800	16400
	Operation weight	kg	14300	15030	15760	16490	17220

Note: 1. Above parameters is based on the standard products;
2. Above products standard pressure is 1.0 Mpa,if pressure higher than 1.0Mpa,should contact with haier technology engineer;
3. Operating ambient temperature range： 15~43℃；
4. Except CC0350PANI/CC0440PANI model,other models are combination ,also separately transport;
5. Due to our policy of innovation some specifications maybe changed without notification;"

OIL FREE CENTRIFUGAL CHILLER

Unit Dimension Diagram

•Air cooled oil free centrifugal chiller dimension diagram

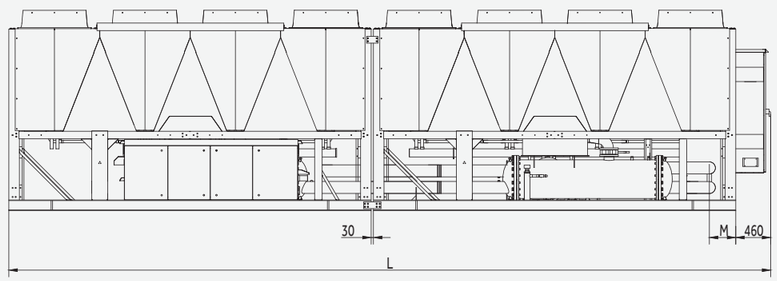

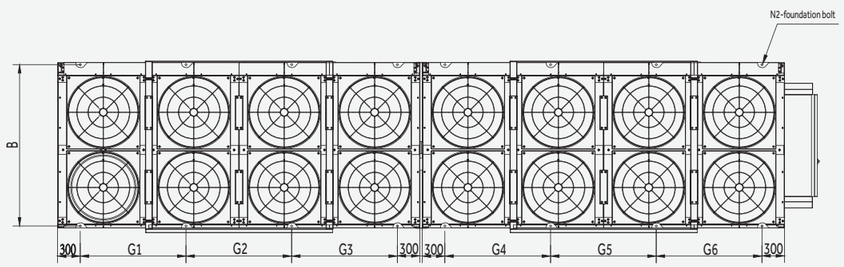

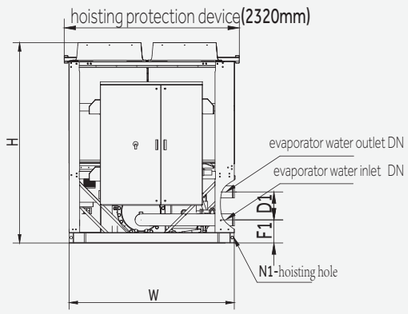

Model	dimension mm			installation dimension mm							pipe connection dimension mm				hoisting hole number	foundation bolt number
	L	W	H	B	G1	G2	G3	G4	G5	G6	D1	F1	M	DN	N1	N2
CC0700PANI	7690	2200	2700	2138	1500	1500		1500	1500		260	304	350	DN150	8	12
CC0790PANI	8890	2200	2700	2138	1500	1500		1400	1400	1400	260	304	350	DN150	8	14
CC0880PANI	10090	2200	2700	2138	1400	1400	1400	1400	1400	1400	260	304	350	DN150	8	16

Unit Dimension Diagram

•Air cooled oil free centrifugal chiller dimension diagram

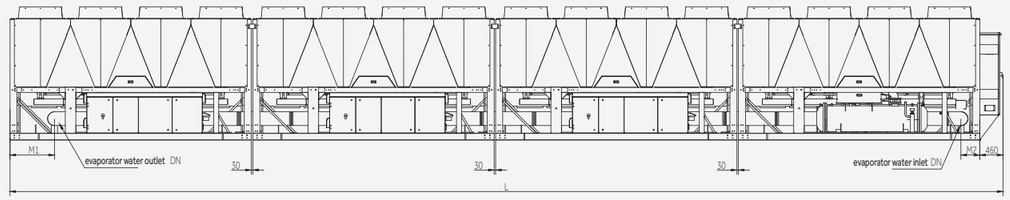

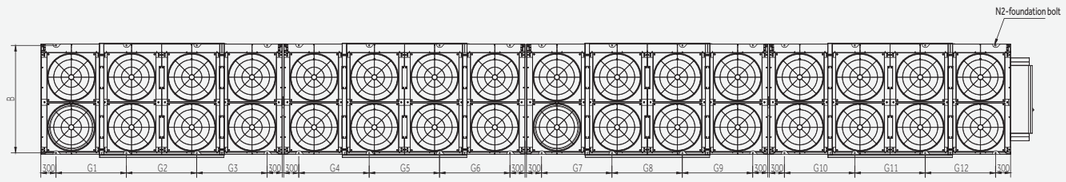

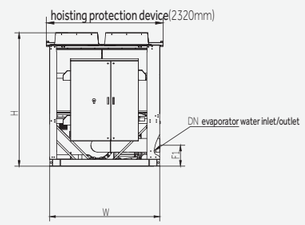

Model	dimension mm			installation dimension mm													pipe connection dimension mm				hoisting hole number	foundation bolt number
	L	W	H	B	G1	G2	G3	G4	G5	G6	G7	G8	G9	G10	G11	G12	F1	M1	M2	DNe	N1	N2
CC1050PANI	11320	2200	2700	2138	1500	1500		1500	1500		1500	1500					426	885	375	DN250	12	18
CC1140PANI	12520	2200	2700	2138	1500	1500		1500	1500		1400	1400	1400				426	885	375	DN250	12	20
CC1230PANI	13720	2200	2700	2138	1500	1500		1400	1400	1400	1400	1400	1400				426	885	375	DN250	12	22
CC1320PANI	14920	2200	2700	2138	1400	1400	1400	1400	1400	1400	1400	1400	1400				426	885	375	DN250	12	24
CC1400PANI	14950	2200	2700	2138	1500	1500		1500	1500		1500	1500		1500	1500		426	885	375	DN250	16	24
CC1490PANI	16150	2200	2700	2138	1500	1500		1500	1500		1500	1500		1400	1400	1400	426	885	375	DN250	16	26
CC1580PANI	17350	2200	2700	2138	1500	1500		1500	1500		1400	1400	1400	1400	1400	1400	426	885	375	DN250	16	28
CC1670PANI	18550	2200	2700	2138	1500	1500		1400	1400	1400	1400	1400	1400	1400	1400	1400	426	885	375	DN250	16	30
CC1760PANI	19750	2200	2700	2138	1400	1400	1400	1400	1400	1400	1400	1400	1400	1400	1400	1400	426	885	375	DN250	16	32

OIL FREE CENTRIFUGAL CHILLER

The Unit Installation Foundation Drawing

•Air-cooled oil free centrifugal chiller installed base

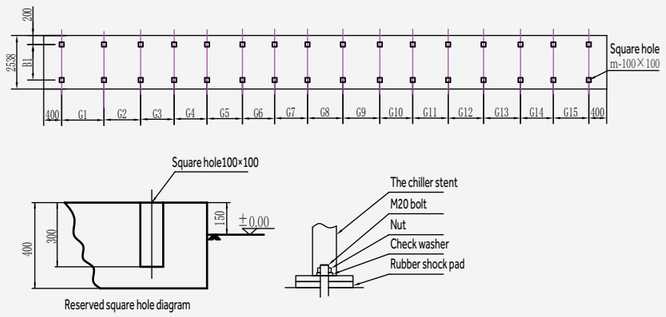

Model	B1(mm)	G1(mm)	G2(mm)	G3(mm)	G4(mm)	G5(mm)	G6(mm)	G7(mm)	G8(mm)	G9(mm)	G10(mm)	G11(mm)	G12(mm)	G13(mm)	G14(mm)	G15(mm)	m
CC0350PANI	2138	1500	1500														6
CC0440PANI	2138	1400	1400	1400													8
CC0700PANI	2138	1500	1500	630	1500	1500											12
CC0790PANI	2138	1500	1500	630	1400	1400	1400										14
CC0880PANI	2138	1400	1400	1400	630	1400	1400	1400									16
CC1050PANI	2138	1500	1500	630	1500	1500	630	1500	1500								18
CC1140PANI	2138	1500	1500	630	1500	1500	630	1400	1400	1400							20
CC1230PANI	2138	1500	1500	630	1400	1400	1400	630	1400	1400	1400						22
CC1320PANI	2138	1400	1400	1400	630	1400	1400	1400	630	1400	1400	1400					24
CC1400PANI	2138	1500	1500	630	1500	1500	630	1500	1500	630	1500	1500					24
CC1490PANI	2138	1500	1500	630	1500	1500	630	1500	1500	630	1400	1400	1400				26
CC1580PANI	2138	1500	1500	630	1500	1500	630	1400	1400	1400	630	1400	1400	1400			28
CC1670PANI	2138	1500	1500	630	1400	1400	1400	630	1400	1400	1400	630	1400	1400	1400		30
CC1760PANI	2138	1400	1400	1400	630	1400	1400	1400	630	1400	1400	1400	630	1400	1400	1400	32

Installation Space Diagram

• Air-cooled oil free centrifugal chiller installation space diagram

mm

Model	A	B	C	D	E
CC0350-0440PANI	2000	2000	1500	2000	1500
CC0700~1760PANI	3000	2000	1500	2000	1500

Note: above data is minimum dimension

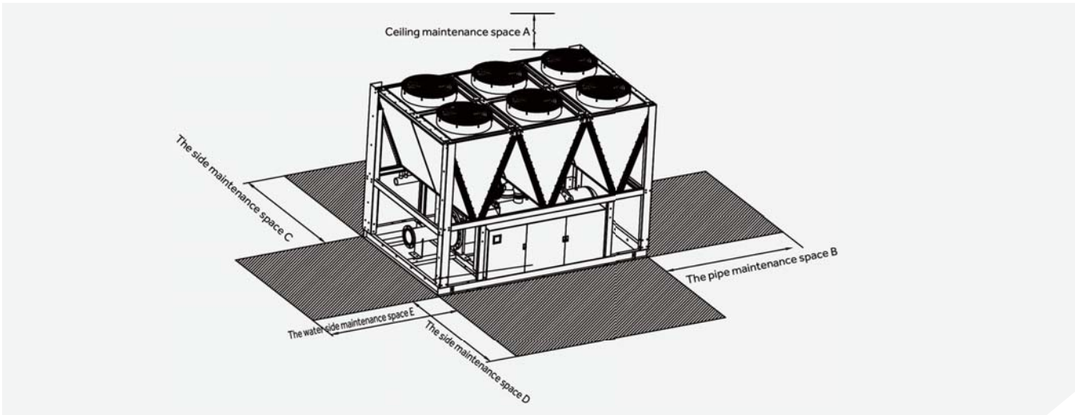

Performance Table

• Air-cooled oil free centrifugal chiller performace table

Chilled water oulet temp. (°C)	Ambient temperature (°C)													
	14		18		23		26		30		35		38	
	Cooling capacity	Power input	Cooling capacity	Power input	Cooling capacity	Power input	Cooling capacity	Power input	Cooling capacity	Power input	Cooling capacity	Power input	Cooling capacity	Power input
5	0.91	0.55	0.96	0.68	1.01	0.82	1.00	0.87	0.96	0.93	0.93	1.02	0.92	1.03
7	0.91	0.52	0.99	0.67	1.06	0.84	1.05	0.90	1.03	1.05	1.00	1.00	1.00	1.05
9	0.92	0.48	1.01	0.63	1.08	0.83	1.08	0.90	1.10	1.01	1.04	1.05	1.01	1.05
10	0.91	0.45	1.02	0.61	1.10	0.83	1.10	0.90	1.13	1.03	1.06	1.06	1.03	1.06
11	0.90	0.42	1.03	0.59	1.13	0.83	1.13	0.91	1.16	1.05	1.07	1.06	1.05	1.06
12	0.88	0.40	1.04	0.57	1.14	0.83	1.16	0.91	1.19	1.05	1.11	1.06	1.07	1.06
13	0.87	0.38	1.05	0.55	1.16	0.82	1.18	0.91	1.22	1.06	1.15	1.06	1.09	1.06
15	0.87	0.33	1.03	0.52	1.19	0.80	1.23	1.01	1.26	1.07	1.19	1.06	1.14	1.06

WATER-COOLED OIL FREE CENTRIFUGAL CHILLER

AHRI CERTIFIED® www.ahridirectory.org

*Picture is based on double compressor model

MODEL			CC0440PWNI	CC0530PWNI	CC0880PWNI
Cooling capacity		RT	125	150	250
		kW	440	528	879
Power input		kW	74.7	87.9	146.5
EER		kW/kW	5.89	6.01	6.00
Starting current		A	2	2	2
Max. running current		A	178	180	356
Safe protection			High/low pressure protection, safety protection, low water flow protection, antifreezing protection, compressor overload, lack of phase protection		
Compressor	Type		Magnetic bearing compressor		
	Starting mode		Soft start		
	Quantity		1	1	2
Power supply		Ph/V/Hz	3N/380V/50Hz		
Refrigerant throttle type			Electronic expansion valve		
Capacity control			5%-100%		
Controller type			PLC control		
Refrigerant	Type		R134a		
	Charge	kg	180	200	360
Evaporator	Type		Flood type		
	Water inlet/outlet temp		12°C/7°C		
	Inlet/outlet pipe	DN	150	150	200
	Rated water flow	m^3/h	76	91	151
	Water dirt coefficient	(m^2.°C/kW)	0.0176		
	Standard pressure	MPa	1.0		
	Water side resistance	KPa	75	73	68
Condenser	Type		Shell &Tube heat exchanger		
	Water inlet/outlet temp		30°C/35°C		
	Inlet/outlet pipe	DN	150	150	200
	Rated water flow	m^3/h	89	106	176
	Water dirt coefficient	(m^2.°C/kW)	0.044		
	Standard pressure	MPa	1.0		
	Water side resistance	KPa	70	68	65
External dimension	Unit length	mm	2495	2495	4385
	Unit width	mm	1170	1170	1170
	Unit height	mm	2100	2100	2100
Package dimension	Unit length	mm	2550	2550	4450
	Unit width	mm	1435	1435	1435
	Unit height	mm	2200	2200	2200
Weight	Net weight	kg	2370	2480	3800
	Gross weight	kg	2410	2520	3850
	Operation weight	kg	2670	2830	4300

Note: 1. Above parameters is based on the standard products;
2. Above products standard pressure is 1.0 Mpa,if pressure higher than 1.0Mpa,should contact with haier technology engineer;
3. Except above standard models, haier also can be customized products according to customers' requirements ;
4. Due to our policy of innovation some specifications maybe changed without notification;"
5. Model CC1330PWNI-CC2810PWNI is split type chiller , the installer need to combine the chiller on site;

WATER-COOLED OIL FREE CENTRIFUGAL CHILLER

AHRI CERTIFIED® www.ahridirectory.org

*Picture is based on double compressor model

MODEL			CC1100PWNI	CC1330PWNI	CC1400PWNI
Cooling capacity		RT	300	375	400
		kW	1055	1319	1407
Power input		kW	174.7	217.6	230.7
EER		kW/kW	6.04	6.06	6.10
Starting current		A	2	2	2
Max. running current		A	360	534	534
Safe protection			High/low pressure protection, safety protection, low water flow protection, antifreezing protection, compressor overload, lack of phase protection		
Compressor	Type		Magnetic bearing compressor		
	Starting mode		Soft start		
	Quantity		2	3	3
Power supply		Ph/V/Hz	3N/380V/50Hz		
Refrigerant throttle type			Electronic expansion valve		
Capacity control			5%-100%		
Controller type			PLC control		
Refrigerant	Type		R134a		
	Charge	kg	400	540	560
Evaporator	Type		Flood type		
	Water inlet/outlet temp		12°C/7°C		
	Inlet/outlet pipe	DN	200	250	250
	Rated water flow	m^3/h	189	227	242
	Water dirt coefficient	(m^2.°C/kW)	0.0176		
	Standard pressure	MPa	1.0		
	Water side resistance	KPa	70	33	30
Condenser	Type		Shell &Tube heat exchanger		
	Water inlet/outlet temp		30°C/35°C		
	Inlet/outlet pipe	DN	200	250	250
	Rated water flow	m^3/h	212	264	282
	Water dirt coefficient	(m^2.°C/kW)	0.044		
	Standard pressure	MPa	1.0		
	Water side resistance	KPa	65	30	30
External dimension	Unit length	mm	4385	4780	4780
	Unit width	mm	1170	2220	2220
	Unit height	mm	2100	2100	2100
Package dimension	Unit length	mm	4450	5000	5000
	Unit width	mm	1435	2600	2600
	Unit height	mm	2200	2200	2200
Weight	Net weight	kg	4190	6130	6430
	Gross weight	kg	4190	6200	6500
	Operation weight	kg	4740	6880	7230

Note: 1. Above parameters is based on the standard products;
2. Above products standard pressure is 1.0 Mpa,if pressure higher than 1.0Mpa,should contact with haier technology engineer;
3. Except above standard models, haier also can be customized products according to customers' requirements ;
4. Due to our policy of innovation some specifications maybe changed without notification;"
5. Model CC1330PWNI-CC2810PWNI is split type chiller , the installer need to combine the chiller on site;

WATER-COOLED OIL FREE CENTRIFUGAL CHILLER

AHRI CERTIFIED® www.ahridirectory.org

*Picture is based on double compressor model

MODEL			CC1580PWNI	CC1760PWNI	CC1930PWNI
Cooling capacity		RT	450	500	550
		kW	1583	1759	1934
Power input		kW	259.5	287.9	316.5
EER		kW/kW	6.10	6.11	6.11
Starting current		A	2	2	2
Max. running current		A	540	712	716
Safe protection			High/low pressure protection, safety protection, low water flow protection, antifreezing protection, compressor overload, lack of phase protection		
Compressor	Type		Magnetic bearing compressor		
	Starting mode		Soft start		
	Quantity		3	4	4
Power supply		Ph/V/Hz	3N/380V/50Hz		
Refrigerant throttle type			Electronic expansion valve		
Capacity control			5%-100%		
Controller type			PLC control		
Refrigerant	Type		R134a		
	Charge	kg	600	720	760
Evaporator	Type		Flood type		
	Water inlet/outlet temp		12°C/7°C		
	Inlet/outlet pipe	DN	250	250	250
	Rated water flow	m^3/h	272	303	333
	Water dirt coefficient	(m^2.°C/kW)	0.0176		
	Standard pressure	MPa	1.0		
	Water side resistance	KPa	32	68	68
Condenser	Type		Shell &Tube heat exchanger		
	Water inlet/outlet temp		30°C/35°C		
	Inlet/outlet pipe	DN	250	250	250
	Rated water flow	m^3/h	317	352	387
	Water dirt coefficient	(m^2.°C/kW)	0.044		
	Standard pressure	MPa	1.0		
	Water side resistance	KPa	30	65	65
External dimension	Unit length	mm	4780	4780	4780
	Unit width	mm	2220	2220	2220
	Unit height	mm	2100	2100	2100
Package dimension	Unit length	mm	5000	5000	5000
	Unit width	mm	2600	2600	2600
	Unit height	mm	2200	2200	2200
Weight	Net weight	kg	6460	8200	8300
	Gross weight	kg	6530	8280	8380
	Operation weight	kg	7260	9200	9400

Note: 1. Above parameters is based on the standard products;
2. Above products standard pressure is 1.0 Mpa,if pressure higher than 1.0Mpa,should contact with haier technology engineer;
3. Except above standard models, haier also can be customized products according to customers' requirements ;
4. Due to our policy of innovation some specifications maybe changed without notification;"
5. Model CC1330PWNI-CC2810PWNI is split type chiller , the installer need to combine the chiller on site;

WATER-COOLED OIL FREE CENTRIFUGAL CHILLER

AHRI CERTIFIED® www.ahridirectory.org

*Picture is based on double compressor model

MODEL			CC2110PWNI	CC2460PWNI	CC2810PWNI
Cooling capacity		RT	600	700	800
		kW	2110	2462	2814
Power input		kW	344.2	402.3	457.6
EER		kW/kW	6.13	6.12	6.15
Starting current		A	2	2	2
Max. running current		A	720	894	900
Safe protection			High/low pressure protection, safety protection, low water flow protection, antifreezing protection, compressor overload, lack of phase protection		
Compressor	Type		Magnetic bearing compressor		
	Starting mode		Soft start		
	Quantity		4	5	5
Power supply		Ph/V/Hz	3N/380V/50Hz		
Refrigerant throttle type			Electronic expansion valve		
Capacity control			5%-100%		
Controller type			PLC control		
Refrigerant	Type		R134a		
	Charge	kg	800	900	1000
Evaporator	Type		Flood type		
	Water inlet/outlet temp		12°C/7°C		
	Inlet/outlet pipe	DN	250	300	300
	Rated water flow	m^3/h	363	423	484
	Water dirt coefficient	(m^2.°C/kW)	0.0176		
	Standard pressure	MPa	1.0		
	Water side resistance	KPa	66	99	99
Condenser	Type		Shell &Tube heat exchanger		
	Water inlet/outlet temp		30°C/35°C		
	Inlet/outlet pipe	DN	250	300	300
	Rated water flow	m^3/h	422	493	563
	Water dirt coefficient	(m^2.°C/kW)	0.044		
	Standard pressure	MPa	1.0		
	Water side resistance	KPa	62	99	95
External dimension	Unit length	mm	4780	6450	6450
	Unit width	mm	2220	2420	2420
	Unit height	mm	2100	2100	2100
Package dimension	Unit length	mm	5000	6550	6550
	Unit width	mm	2600	2600	2600
	Unit height	mm	2200	2200	2200
Weight	Net weight	kg	8350	11150	11350
	Gross weight	kg	8430	11300	11500
	Operation weight	kg	9450	12350	12650

Note: 1. Above parameters is based on the standard products;
2. Above products standard pressure is 1.0 Mpa,if pressure higher than 1.0Mpa,should contact with haier technology engineer;
3. Except above standard models, haier also can be customized products according to customers' requirements ;
4. Due to our policy of innovation some specifications maybe changed without notification;"
5. Model CC1330PWNI-CC2810PWNI is split type chiller , the installer need to combine the chiller on site;

WATER-COOLED OIL FREE CENTRIFUGAL CHILLER

AHRI CERTIFIED® www.ahridirectory.org

*Picture is based on double compressor model

MODEL			CC3170PWNI	CC4220PWNI	CC6330PWNI
Cooling capacity		RT	900	1200	1800
		kW	3165	4220	6330.6
Power input		kW	518.0	689.5	1029.4
EER		kW/kW	6.11	6.12	6.15
Starting current		A	2	2	2
Max. running current		A	975	1440	2160
Safe protection			High/low pressure protection, safety protection, low water flow protection, antifreezing protection, compressor overload, lack of phase protection		
Compressor	Type		Magnetic bearing compressor		
	Starting mode		Soft start		
	Quantity		6	8	12
Power supply		Ph/V/Hz	3N/380V/50Hz		
Refrigerant throttle type			Electronic expansion valve		
Capacity control			5%-100%		
Controller type			PLC control		
Refrigerant	Type		R134a		
	Charge	kg	1200	1600	2400
Evaporator	Type		Flood type		
	Water inlet/outlet temp		12°C/7°C		
	Inlet/outlet pipe	DN	350	350	450
	Rated water flow	m^3/h	544	725.9	1088.9
	Water dirt coefficient	(m^2.°C/kW)	0.0176		
	Standard pressure	MPa	1.0		
	Water side resistance	KPa	99	97	97
Condenser	Type		Shell &Tube heat exchanger		
	Water inlet/outlet temp		30°C/35°C		
	Inlet/outlet pipe	DN	350	350	450
	Rated water flow	m^3/h	633	844	1266
	Water dirt coefficient	(m^2.°C/kW)	0.044		
	Standard pressure	MPa	1.0		
	Water side resistance	KPa	99	95	96
External dimension	Unit length	mm	4300	5100	7700
	Unit width	mm	3200	3050	3500
	Unit height	mm	2400	2560	2500
Package dimension	Unit length	mm	4500	5200	7800
	Unit width	mm	3500	3500	3650
	Unit height	mm	2400	2660	2660
Weight	Net weight	kg	11950	15350	25310
	Gross weight	kg	12100	15500	25460
	Operation weight	kg	15450	19350	29810

Note: 1, Above parameters is based on the standard products;
2, Above products standard pressure is 1.0 Mpa,if pressure higher than 1.0Mpa,should contact with haier technology engineer;
3. Except above standard models, haier also can be customized products according to customers' requirements ;
4. Due to our policy of innovation some specifications maybe changed without notification;"
5. Model CC1330PWNI-CC2810PWNI is split type chiller , the installer need to combine the chiller on site;

OIL FREE CENTRIFUGAL CHILLER

Unit Dimension Diagram

•Water-cooled oil free centrifugal chiller dimension diagram
Single compressor unit dimension diagram

CC0440PWNI
CC0530PWNI

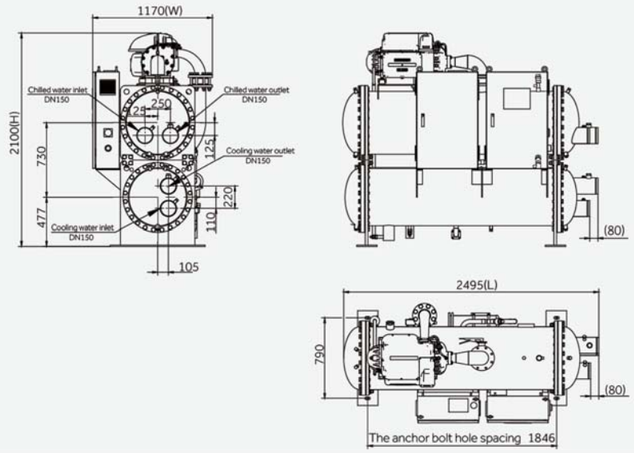

The double compressores chiller series connection standard, parallel connection is optional,below is unit dimension diagram

•Twin-compressor series connection unit dimension diagram

CC0880PWNI
CC1100PWNI

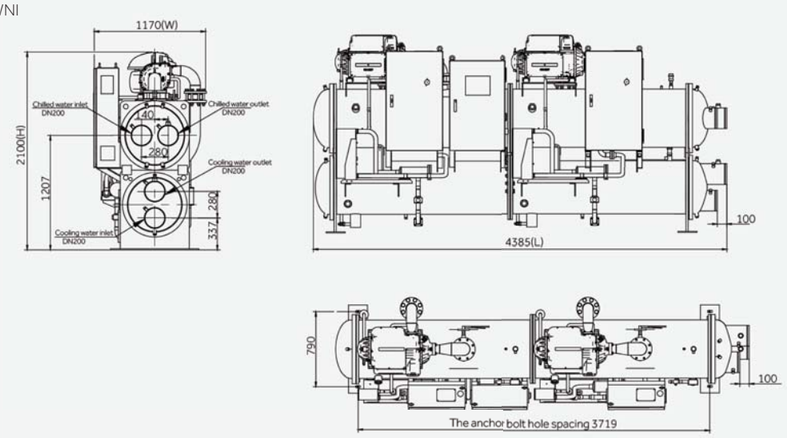

OIL FREE CENTRIFUGAL CHILLER

Unit Dimension Diagram

The chiller with three compressor is parallel connection,and also can realize series connection for special requirements.
This is the unit dimension diagram

•Three compressores series connection unit dimension diagram

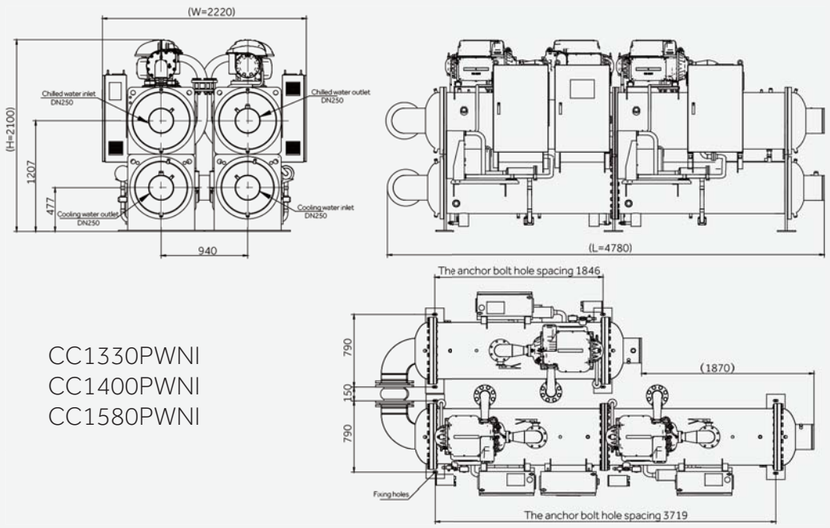

CC1330PWNI
CC1400PWNI
CC1580PWNI

•Four compressores parallel connection unit dimension diagram

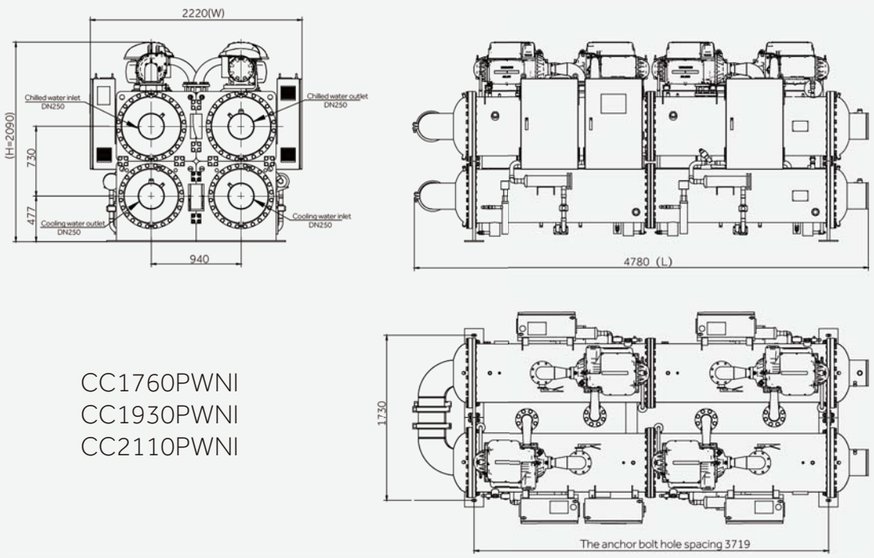

CC1760PWNI
CC1930PWNI
CC2110PWNI

Unit Dimension Diagram

•Five compressores parallel connection unit dimension diagram

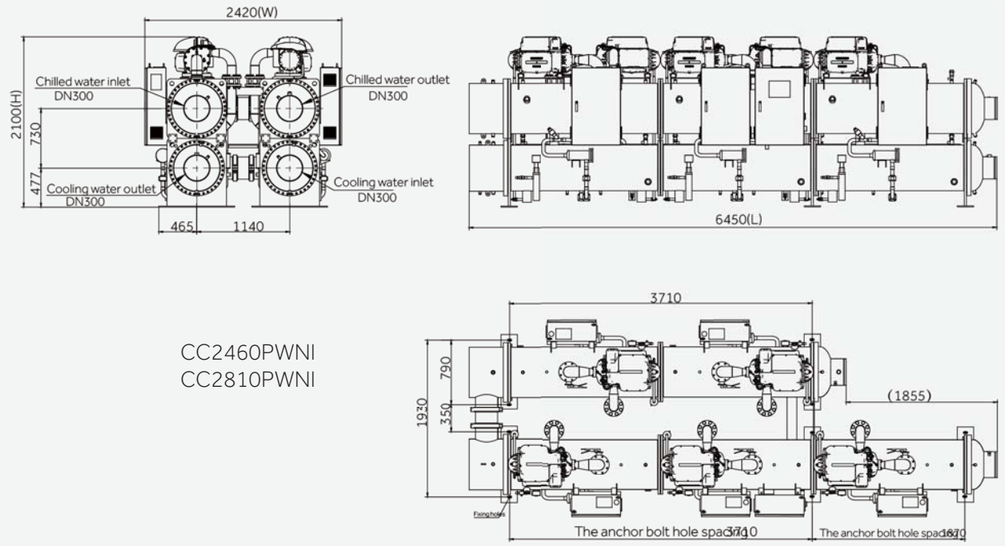

CC2460PWNI
CC2810PWNI

•Big capacity oil free centrifugal chiller series(for example the model with six compressor)

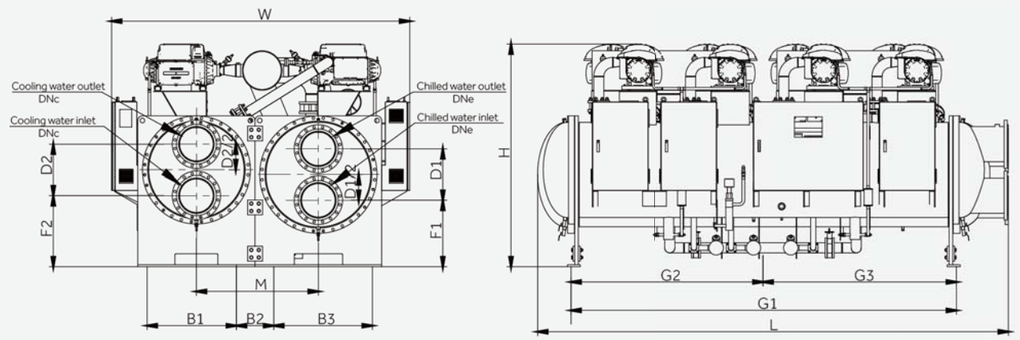

CC3170PWNI
CC4220PWNI
CC6330PWNI

Model	Dimension mm			Installation Dimension mm						Pipe Connection Dimension mm						
	L	W	H	B1	B2	B3	G1	G2	G3	D1	D2	F1	F2	M	DNe	DNc
CC3170PWNI	4300	3200	2400	960	400	1060	3348			550	550	715	765	1310	DN350	DN350
CC4220PWNI	5100	3200	2400	960	400	1060	4148			550	550	715	765	1310	DN350	DN350
CC6330PWNI	7700	3500	2500	1160	400	1160		3390	3230	620	620	730	730	1460	DN450	DN450

Notes:
1, Above products direction of the evaporator and condenser water inlet and water outlet can be adjusted according to user requirements
2, Product diamension also can be changed if user have special requirements

OIL FREE CENTRIFUGAL CHILLER

The Unit Installation Foundation Drawing

•Water-cooled oil free centrifugal chiller installed base

Single compressor & Twin-compressor series dimension

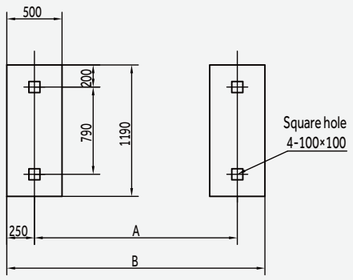

Model	A(mm)	B(mm)
CC0440PWNI	1846	2346
CC0530PWNI	1846	2346
CC0880PWNI	3719	4219
CC1100PWNI	3719	4219

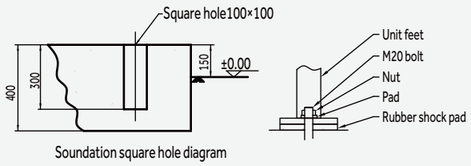

Three compressors series dimension

CC1320PWNI
CC1400PWNI
CC1580PWNI

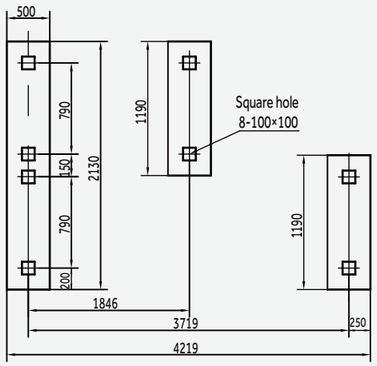

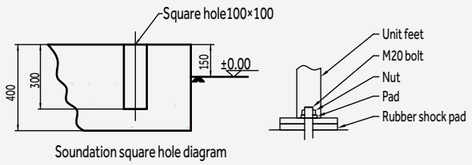

Four compressors series dimension

CC1760PWNI
CC1930PWNI
CC2110PWNI

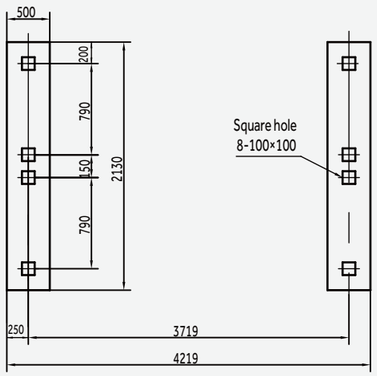

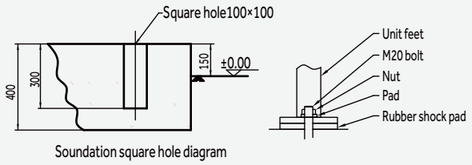

The Unit Installation Foundation Drawing

•Water-cooled oil free centrifugal chiller installed base

Five compressors series dimension

CC2460PWNI
CC2810PWNI

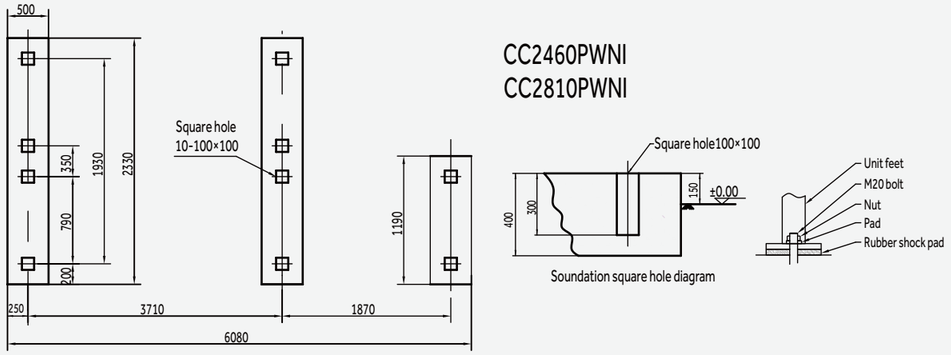

Big capacity chiller series dimension

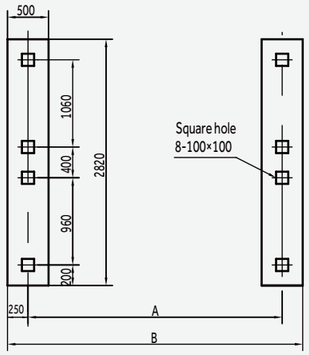

Model	A(mm)	B(mm)
CC3170PWNI	3348	3848
CC4220PWNI	4148	4648

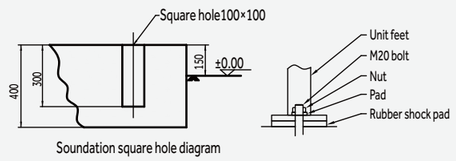

CC6330PWNI

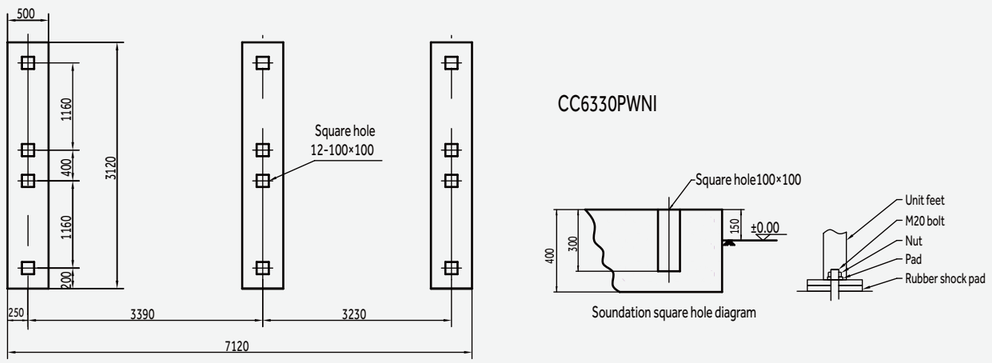

OIL FREE CENTRIFUGAL CHILLER

Installation Space Diagram

• Water-cooled oil free centrifugal chiller installation space diagram

mm

Model	A	B	C	D	E
CC0440~CC0530PWNI	500	2000	1500	1500	1000
CC0880~CC2810PWNI	500	2000	1500	1500	2000
CC3170PWNI	1000	3500	1500	1500	2000
CC4220PWNI	1000	4300	1500	1500	2000
CC6330PWNI	1000	3500	1500	1500	3500

Note: above data is minimum dimension

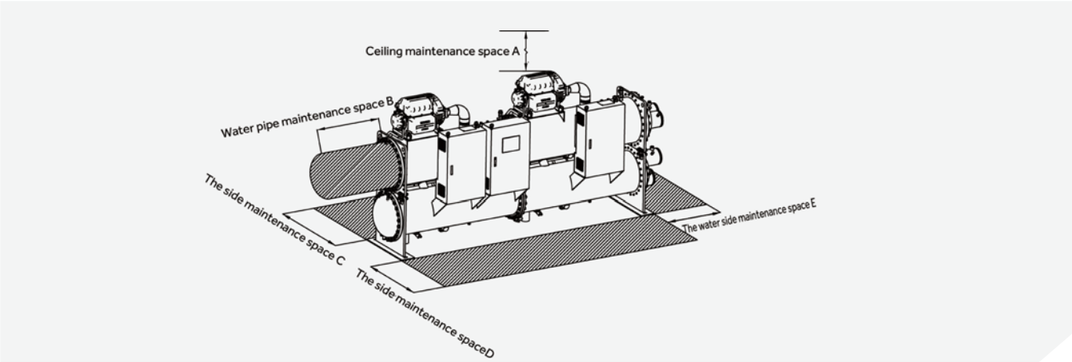

Performance Table

• Water-cooled oil free centrifugal chiller performace table

Performance table
Cooling water inlet temperature(°C)

Chilled water oulet temp.(°C)	22		24		26		28		30		32		34		36	
	Cooling capacity	Power input	Cooling capacity	Power input	Cooling capacity	Power input	Cooling capacity	Power input	Cooling capacity	Power input	Cooling capacity	Power input	Cooling capacity	Power input	Cooling capacity	Power input
5	0.92	0.73	0.95	0.81	0.98	0.88	0.96	0.95	0.96	1.02	0.95	1.08	0.94	1.15	0.92	1.20
6	0.93	0.71	0.95	0.80	0.97	0.88	0.98	0.95	0.98	1.01	0.97	1.08	0.97	1.16	0.95	1.21
7	0.94	0.69	0.97	0.77	0.99	0.86	0.99	0.92	1.00	1.00	1.00	1.07	0.99	1.14	0.98	1.21
8	0.98	0.67	0.98	0.75	1.00	0.83	1.02	0.92	1.03	0.99	1.03	1.07	1.03	1.14	1.02	1.21
9	0.96	0.63	0.99	0.72	1.01	0.81	1.04	0.90	1.05	0.98	1.06	1.06	1.05	1.12	1.05	1.20
10	0.95	0.60	1.00	0.70	1.03	0.78	1.05	0.87	1.07	0.96	1.08	1.03	1.08	1.11	1.08	1.20
11	0.93	0.52	1.00	0.63	1.05	0.73	1.07	0.82	1.10	0.91	1.12	1.01	1.12	1.08	1.13	1.16
12	0.93	0.52	0.96	0.50	1.04	0.53	1.09	0.71	1.14	0.83	1.16	0.92	1.19	1.02	1.21	1.13
13	0.93	0.52	0.96	0.50	1.04	0.47	1.05	0.57	1.13	0.69	1.19	0.82	1.23	0.93	1.25	1.13

MODULAR WATER-COOLED OIL FREE CENTRIFUGAL CHILLER

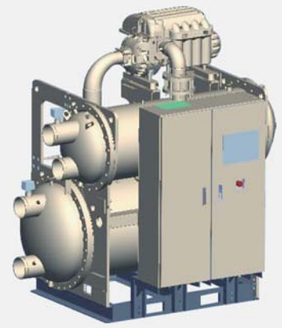

AHRI CERTIFIED® www.ahridirectory.org

MODEL			CC0320PWNN	CC0400PWNN	CC0500PWNN
Cooling capacity		RT	90	114	142
		kW	320	400	500
Power input		kW	55.2	71.4	89.3
EER		kW/kW	5.80	5.60	5.60
Starting current		A	2	2	2
Max. runnin current		A	176	178	180
Safe protection			compressor overload protection, safe protection, low water flow protection, antifreezing protection,fan motor overload protection,lack of phase protection		
Compressor	Type		Magnetic bearing compressor		
	Starting mode		soft start		
	Quantity		1	1	1
Power supply		Ph/V/Hz	3N/380V/50Hz		
Refrigerant throttle type			Electronic expansion valve		
Capacity control			5%~100%		
Controller type			PLC control		
Refrigerant	Type		R134a		
	Charge	kg	80	85	100
Evaporator	Type		falling film		
	Water inlet/outlet temp		12°C/7°C		
	Inlet/outlet pipe	DN	150	150	150
	Rated water flow	m^3/h	55	69	86
	Water dirt coefficient	(m^2·°C/kW)	0.0176		
	Standard pressure	MPa	1.0		
	Water side resistance	KPa	60	60	55
Condenser	Type		Shell &Tube heat exchanger		
	Water inlet/outlet temp		30°C/35°C		
	Inlet/outlet pipe	DN	150	150	150
	Rated water flow	m^3/h	75	95	110
	Water dirt coefficient	(m^2·°C/kW)	0.044		
	Standard pressure	MPa	1.0		
	Water side resistance	KPa	75	75	80
External dimension	Unit length	mm	1880	1880	1880
	Unit width	mm	1400	1400	1425
	Unit height	mm	2010	2010	2070
Weight	Net weight	Kg	1890	1950	2080
	Gross weight	Kg	1930	1990	2120
	Operation weight	Kg	2140	2210	2370

* Data is pending

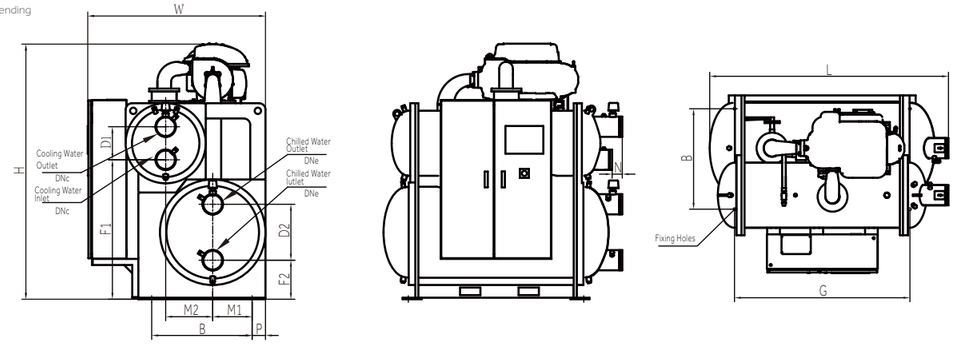

Model	Dimension mm			Instalation Dimension mm			Pipe Connection Dimension mm								
	L	W	H	B	G	P	D1	D2	F1	F2	M1	M2	N	DNe	DNc
CC0320PWNN	1880	1400	2010	790	1380	105	260	440	1097	307	310	370	80	DN150	DN150
CC0400PWNN	1880	1400	2010	790	1380	105	260	440	1097	307	310	370	80	DN150	DN150
CC0500PWNN	1880	1425	2070	790	1380	105	260	440	1122	307	310	370	80	DN150	DN150

AIR-COOLED SCREW CHILLER

AIR-COOLED SCREW CHILLER R134a

High Efficiency

High efficient compressor

The unit adopts high efficient twin-screw compressor.

- High efficiency: The compressor adopt 5:6 non-symmetry bear design, large volume, high efficiency.
- The units adopt multi-stage adjustment, each unit can realize 25%-50%-75%-100% volume control, suit for various condition, high part load EER value.
- Motor adopts Y-Δ start method, low start current, low impact to the power network.
- High precise manufacturing process, avoid any leakage, increase the compressor efficiency.
- The inner refrigerant suction system is cooled by the refrigerant, avoid any capacity loss.
- The suction side adopt temp. insulation material, avoid any condensing and energy loss.

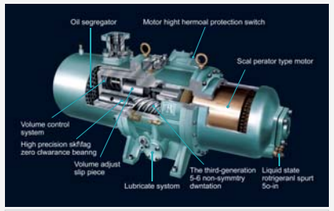

V-shape condenser

Condenser adopts the copper tube & hydrophilic aluminum fin coil type structure, the appearance is V type, this design increases the heat exchange area, reduces the temp. differences, thus increases the heat exchange efficiency by 20%.

Economizer sub-cooling design

R134a air cooled screw chiller takes high efficiency plate heat exchanger as economizer , it sub cool the refrigerant for another 18 degrees in high pressure side , increase the capacity , so EER increase 3-5%.

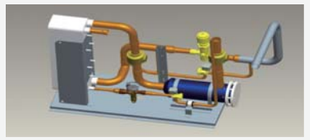

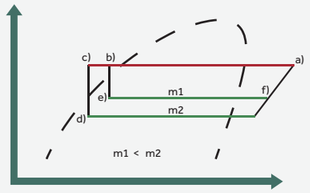

EEV design

R134a air cooled screw chiller takes 3810 steps EEV to control the refrigerant flow,

The refrigerant flow is precise according to the need, increase the EER also keep the products more stable.

Reliability

Wide running application

Products can run under 52 high degree in cooling , even in the hot summer , in the roof, products can still run stably.

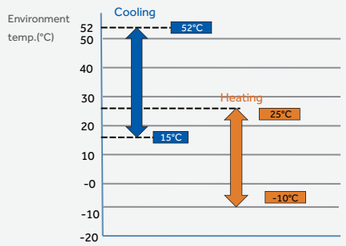

Convenience

Password design

The controller can set password , so only the administrator can operate the chiller.

Functional control screen

7 inch colorful touch screen.

Status: Water temperature, pressure/current/pump/running curve/history curve

Timer: Weekly timer

Error : Error history check

User: Local control/BMS control

AIR-COOLED SCREW CHILLER(Cooling only)

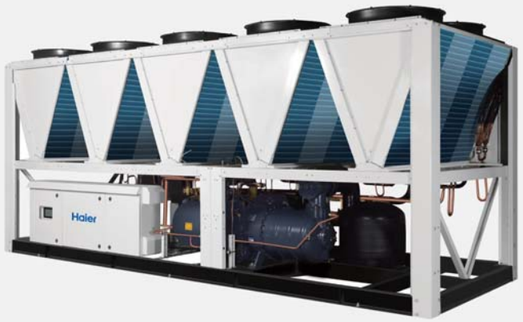

MODEL			CI0360PAND*	CI0360PANE*
Cooling	Cooling capacity	kW	360	360
	Power input	kW	116	116
	Running current	A	3.1	3.1
Heating	Heating capacity	kW	202	202
	Power input	kW	190	190
	Running current	A	340	340
Max.Power input		kW		
Max. running current		A		
Power supply		Ph/V/Hz	3/380/50	
Refrigerant throttle type			Electronic expansion valve	
Capacity control			25%,50%,75%,100%	
Safe protection			High and low pressure protection, safe protection, water-lack delay protection, automatic antifreezing protection, fan motor overload protection, overheating protection, phase lack & sequence protection	
Compressor	Type		Semi-Hermetic screw chiller	
	Quantity		1	1
	Input power	kW	99.2	99.2
Refrigerant	Type		R134a	
	Charge	kg		
Air side heat exchanger	Type		Inner grooved copper pipe & hydrophilic aluminum fin coil	
	Fan power	kW	2.3	2.3
	Fan type		Axial fan	
	Fan quantity		6	6
Water side heat exchanger	Type		Falling film	
	Rated water flow	m^3/h	60	60
	Inlet/outlet pipe	DN	100	100
	Water dirt coefficient	$m^2.°C/kW$	0.018	
	Standard pressure	MPa	1.0	
	Water resistance	KPa	72	72
External dimension	Unit length	mm	3450*	3450*
	Unit width	mm	2050	
	Unit height	mm	2520	
Package dimension	Unit length	mm	3500*	3500*
	Unit width	mm	2100	
	Unit height	mm	2620	
Weight	Unit weight	kg	3500*	3500*
	Gross weight	kg	3550*	3550*
	Operation weight	kg	3780*	3780*

Note: * Data is pending;
* The dimension and weight data will be updated soon ;
*The CI** PAND is the master unit ,CI**PANE is the slave unit. Every system can be 4 units maximum , with one master unit only;

AIR-COOLED SCREW CHILLER(Cooling only)

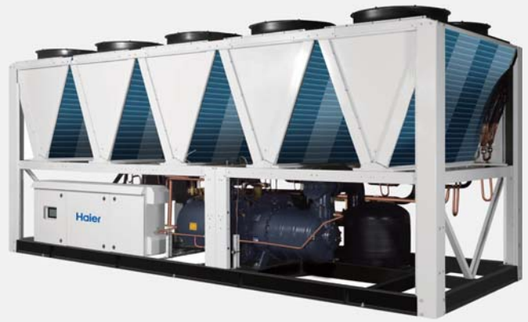

MODEL			CI0480PAND*	CI0480PANE*	CI0620PAND*	CI0620PANE*
Cooling	Cooling capacity	kW	480	480	620	620
	Power input	kW	155	155	200	200
	Running current	A	3.1	3.1	3.1	3.1
Heating	Heating capacity	kW	272	272	354	354
	Power input	kW	256	256	315	315
	Running current	A	450	450	558	558
Max.Power input		kW				
Max. running current		A				
Power supply		Ph/V/Hz	3/380/50			
Refrigerant throttle type			Electronic expansion valve			
Capacity control			25%,50%,75%,100%			
Safe protection			High and low pressure protection, safe protection, water-lack delay protection, automatic antifreezing protection, fan motor overload protection, overheating protection, phase lack & sequence protection			
Compressor	Type		Semi-Hermetic screw chiller			
	Quantity		1	1	1	1
	Input power	kW	136.6	136.6	177	177
Refrigerant	Type		R134a			
	Charge	kg				
Air side heat exchanger	Type		Inner grooved copper pipe & hydrophilic aluminum fin coil			
	Fan power	kW	2.3	2.3	2.3	2.3
	Fan type		Axial fan			
	Fan quantity		8	8	10	10
Water side heat exchanger	Type		Falling film			
	Rated water flow	m^3/h	83	83	107	107
	Inlet/outlet pipe	DN	125	125	150	150
	Water dirt coefficient	$m^2.°C/kW$	0.018			
	Standard pressure	MPa	1.0			
	Water resistance	KPa	78	78	85	85
External dimension	Unit length	mm	4600*	4600*	5750*	5750*
	Unit width	mm	2050			
	Unit height	mm	2520			
Package dimension	Unit length	mm	4600*	4600*	5900*	5900*
	Unit width	mm	2210			
	Unit height	mm	2620			
Weight	Unit weight	kg	5000*	5000*	6000*	6000*
	Gross weight	kg	5070*	5070*	6070*	6070*
	Operation weight	kg	5400*	5400*	6480*	6480*

Note: * Data is pending;
* The dimension and weight data will be updated soon ;
*The CI** PAND is the master unit ,CI**PANE is the slave unit. Every system can be 4 units maximum , with one master unit only;

AIR-COOLED SCREW CHILLER(Cooling only)

MODEL			CI0440PAND*	CI0440PANE*
Cooling	Cooling capacity	kW	437	437
	Power input	kW	130	130
	Running current	A	3.35	3.35
Heating	Heating capacity	kW	211	211
	Power input	kW	190	190
	Running current	A	340	340
Max.Power input		kW		
Max. running current		A		
Power supply		Ph/V/Hz	3/380/50	
Refrigerant throttle type			Electronic expansion valve	
Capacity control			25%,50%,75%,100%	
Safe protection			High and low pressure protection, safe protection, water-lack delay protection, automatic antifreezing protection, fan motor overload protection, overheating protection, phase lack & sequence protection	
Compressor	Type		Semi-Hermetic screw chiller	
	Quantity		1	1
	Input power	kW	108	99.2
Refrigerant	Type		R134a	
	Charge	kg		
Air side heat exchanger	Type		Inner grooved copper pipe & hydrophilic aluminum fin coil	
	Fan power	kW	2.5	2.3
	Fan type		Axial fan	
	Fan quantity		6	6
Water side heat exchanger	Type		Falling film	
	Rated water flow	m^3/h	60	60
	Inlet/outlet pipe	DN	100	100
	Water dirt coefficient	$m^2.°C/kW$	0.018	
	Standard pressure	MPa	1.0	
	Water resistance	KPa	72	72
External dimension	Unit length	mm	3450*	3450*
	Unit width	mm	2050	
	Unit height	mm	2520	
Package dimension	Unit length	mm	3500*	3500*
	Unit width	mm	2100	
	Unit height	mm	2620	
Weight	Unit weight	kg	3500*	3500*
	Gross weight	kg	3550*	3550*
	Operation weight	kg	3780*	3780*

Note: * Data is pending;
* The dimension and weight data will be updated soon ;
*The CI** PAND is the master unit ,CI**PANE is the slave unit. Every system can be 4 units maximum , with one master unit only;

AIR-COOLED SCREW CHILLER(Cooling only)

MODEL			CI0580PAND*	CI0580PANE*	CI0750PAND*	CI0750PANE*
Cooling	Cooling capacity	kW	580	580	750	750
	Power input	kW	173	173	224	224
	Running current	A	3.35	3.35	3.35	3.35
Heating	Heating capacity	kW	284	284	369	369
	Power input	kW	256	256	315	315
	Running current	A	450	450	558	558
Max.Power input		kW				
Max. running current		A				
Power supply		Ph/V/Hz	3/380/50			
Refrigerant throttle type			Electronic expansion valve			
Capacity control			25%,50%,75%,100%			
Safe protection			High and low pressure protection, safe protection, water-lack delay protection, automatic antifreezing protection, fan motor overload protection, overheating protection, phase lack & sequence protection			
Compressor	Type		Semi-Hermetic screw chiller			
	Quantity		1	1	1	1
	Input power	kW	136.6	136.6	177	177
Refrigerant	Type		R134a			
	Charge	kg				
Air side heat exchanger	Type		Inner grooved copper pipe & hydrophilic aluminum fin coil			
	Fan power	kW	2.3	2.3	2.3	2.3
	Fan type		Axial fan			
	Fan quantity		8	8	10	10
Water side heat exchanger	Type		Falling film			
	Rated water flow	m^3/h	83	83	107	107
	Inlet/outlet pipe	DN	125	125	150	150
	Water dirt coefficient	$m^2.°C/kW$	0.018			
	Standard pressure	MPa	1.0			
	Water resistance	KPa	78	78	85	85
External dimension	Unit length	mm	4600*	4600*	5750*	5750*
	Unit width	mm	2050			
	Unit height	mm	2520			
Package dimension	Unit length	mm	4600*	4600*	5900*	5900*
	Unit width	mm	2210			
	Unit height	mm	2620			
Weight	Unit weight	kg	5000*	5000*	6000*	6000*
	Gross weight	kg	5070*	5070*	6070*	6070*
	Operation weight	kg	5400*	5400*	6480*	6480*

Note: * Data is pending;
* The dimension and weight data will be updated soon ;
*The CI** PAND is the master unit ,CI**PANE is the slave unit. Every system can be 4 units maximum , with one master unit only;

AIR-COOLED SCREW CHILLER(Heat pump)

MODEL			CI0360DAND	CI0360DANE
Cooling	Cooling capacity	kW	350	350
	Power input	kW	106	106
	Running current	A	187	187
Heating	Heating capacity	kW	375	375
	Power input	kW	110	110
	Running current	A	195	195
Max.Power input		kW	190	190
Max. running current		A	340	340
Power supply		Ph/V/Hz	3/380/50	
Refrigerant throttle type			Electronic expansion valve	
Capacity control			25%,50%,75%,100%	
Safe protection			High and low pressure protection, safe protection, water-lack delay protection, automatic antifreezing protection, fan motor overload protection, overheating protection, phase lack & sequence protection	
Compressor	Type		Semi-Hermetic screw chiller	
	Quantity		1	1
	Input power	kW	91	91
Refrigerant	Type		R134a	
	Charge	kg	90	90
Air side heat exchanger	Type		Inner grooved copper pipe & hydrophilic aluminum fin coil	
	Fan power	kW	2.5*6	2.5*6
	Fan type		Axial fan	
	Fan quantity		6	6
Water side heat exchanger	Type		Dry type Shell & Tube heat exchanger	
	Rated water flow	m^3/h	60	60
	Inlet/outlet pipe	DN	100	100
	Water dirt coefficient	$m^2.°C/kW$	0.018	
	Standard pressure	MPa	1.0	
	Water resistance	KPa	50	50
External dimension	Unit length	mm	3450	3450
	Unit width	mm	2050	
	Unit height	mm	2520	
Package dimension	Unit length	mm	3500	3500
	Unit width	mm	2100	
	Unit height	mm	2620	
Weight	Unit weight	kg	3500	3500
	Gross weight	kg	3550	3550
	Operation weight	kg	3780	3780

Note: 1.The CI** DAND is the master unit ,CI**DANE is the slave unit. Every system can be 4 units maximum , with one master unit only;
2. The chiller running weight is 1.05~1.1 times net weight;
3.Due to our policy of innovation some specifications may be changed without notification.

AIR-COOLED SCREW CHILLER(Heat pump)

MODEL			CI0480DAND	CI0480DANE	CI0600DAND	CI0600DANE
Cooling	Cooling capacity	kW	475	475	600	600
	Power input	kW	144	144	182	182
	Running current	A	257	257	325	325
Heating	Heating capacity	kW	510	510	645	645
	Power input	kW	150	150	186	186
	Running current	A	267	267	332	332
Max.Power input		kW	256	256	315	315
Max. running current		A	450	450	558	558
Power supply		Ph/V/Hz	3/380/50			
Refrigerant throttle type			Electronic expansion valve			
Capacity control			25%,50%,75%,100%			
Safe protection			High and low pressure protection, safe protection, water-lack delay protection, automatic antifreezing protection, fan motor overload protection, overheating protection, phase lack & sequence protection			
Compressor	Type		Semi-Hermetic screw chiller			
	Quantity		1	1	1	1
	Input power	kW	124	124	157	157
Refrigerant	Type		R134a			
	Charge	kg	135	135	150	150
Air side heat exchanger	Type		Inner grooved copper pipe & hydrophilic aluminum fin coil			
	Fan power	kW	2.5*8	2.5*8	2.5*10	2.5*10
	Fan type		Axial fan			
	Fan quantity		8	8	10	10
Water side heat exchanger	Type		Dry type Shell & Tube heat exchanger			
	Rated water flow	m^3/h	82	82	103	103
	Inlet/outlet pipe	DN	125	125	150	150
	Water dirt coefficient	$m^2.°C/kW$	0.018			
	Standard pressure	MPa	1.0			
	Water resistance	KPa	50	50	70	70
External dimension	Unit length	mm	4600	4600	5750	5750
	Unit width	mm	2050			
	Unit height	mm	2520			
Package dimension	Unit length	mm	4600	4600	5900	5900
	Unit width	mm	2210			
	Unit height	mm	2620			
Weight	Unit weight	kg	5000	5000	6000	6000
	Gross weight	kg	5070	5070	6070	6070
	Operation weight	kg	5400	5400	6480	6480

Note: 1.The CI** DAND is the master unit ,CI**DANE is the slave unit. Every system can be 4 units maximum , with one master unit only;
2. The chiller running weight is 1.05~1.1 times net weight;
3.Due to our policy of innovation some specifications may be changed without notification.

AIR-COOLED SCREW CHILLER

Unit Dimension Diagram

•CI0360DAND CI0360DANE Unit dimension

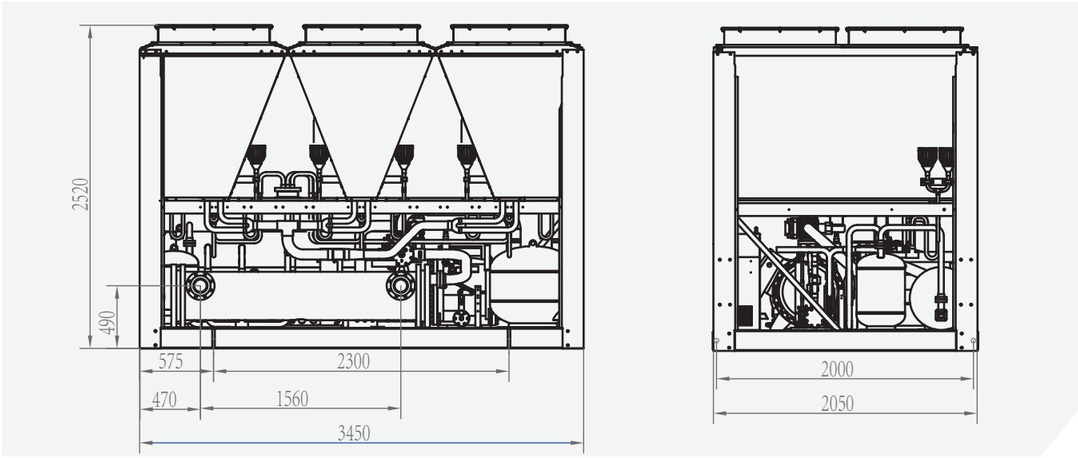

•CI0480DAND CI0480DANE Unit dimension

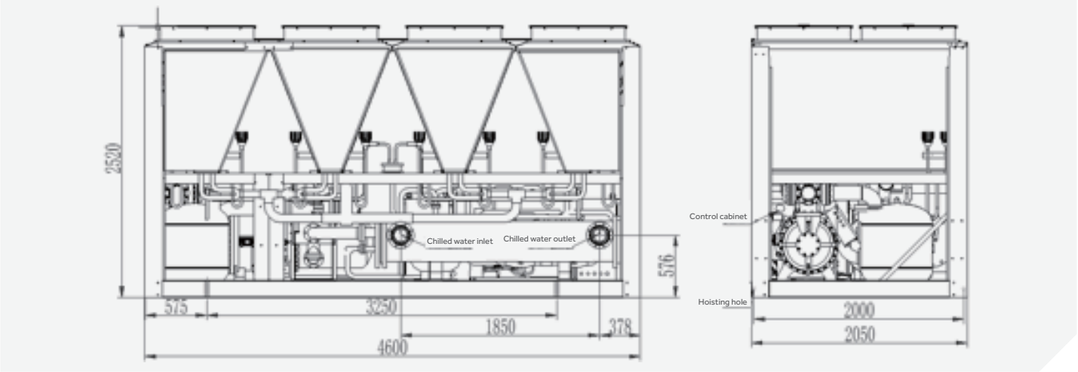

•CI0600DAND CI0600DANE Unit dimension

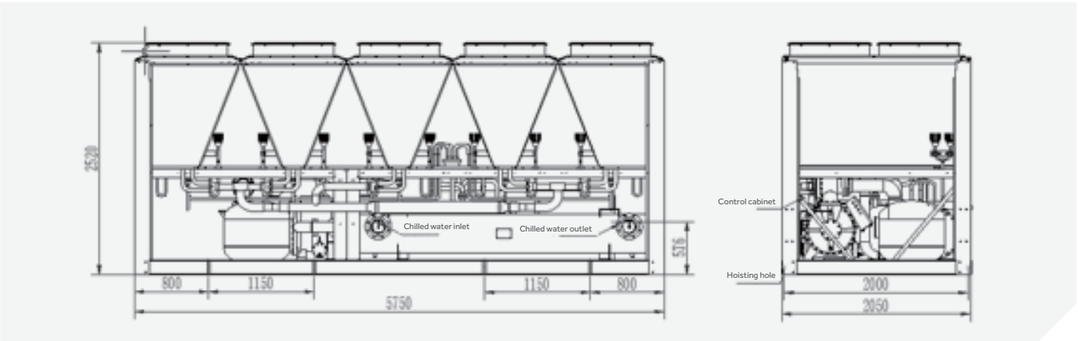

The Unit Installation Foundation Drawing

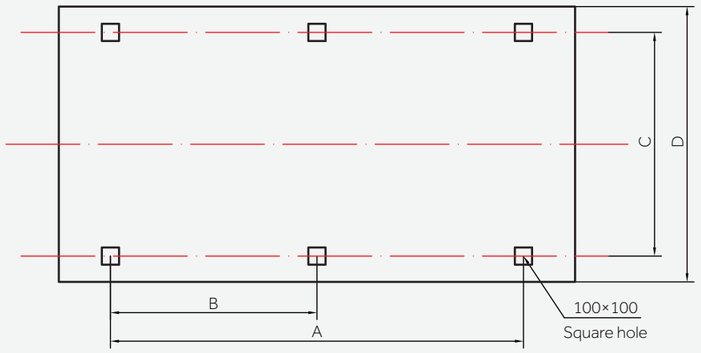

Installation space diagram (unit:mm)

Model	A	B	C	D
CI0360DAND/CI0360DANE	2100		2000	2300
CI0480DAND/CI0480DANE	3250		2000	2300
CI0600DAND/CI0600DANE	4400	2200	2000	2300

Unit Dimension Diagram

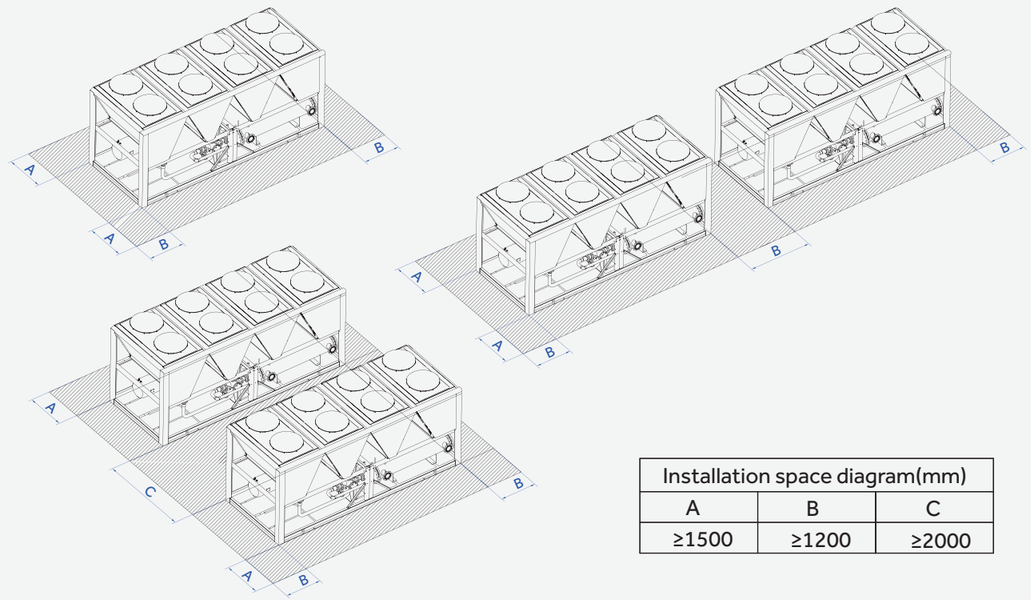

Installation space diagram(mm)		
A	B	C
≥1500	≥1200	≥2000

AIR-COOLED SCREW CHILLER

Performance Table

•Cooling capacity and power input table

Water outlet temp.(°C)	Ambient temp.(°C)	18	21	24	27	30	33	35	38	41	43
5	Cooling capacity(kW)	1.069	1.050	1.040	1.012	0.993	0.974	0.955	0.935	0.907	0.878
	Power input capacity(kW)	0.700	0.754	0.791	0.854	0.891	0.953	0.982	1.036	1.100	1.173
6	Cooling capacity(kW)	1.090	1.070	1.061	1.032	1.012	0.993	0.973	0.954	0.925	0.895
	Power input capacity(kW)	0.706	0.761	0.798	0.862	0.899	0.962	0.991	1.046	1.110	1.184
7	Cooling capacity(kW)	1.120	1.100	1.090	1.060	1.040	1.020	1.000	0.980	0.950	0.920
	Power input capacity(kW)	0.713	0.768	0.805	0.870	0.907	0.971	1.000	1.056	1.120	1.195
8	Cooling capacity(kW)	1.157	1.137	1.126	1.095	1.075	1.054	1.033	1.013	0.982	0.951
	Power input capacity(kW)	0.720	0.776	0.814	0.879	0.917	0.981	1.011	1.067	1.132	1.207
9	Cooling capacity(kW)	1.186	1.165	1.154	1.122	1.101	1.080	1.059	1.038	1.006	0.974
	Power input capacity(kW)	0.726	0.782	0.820	0.886	0.924	0.989	1.018	1.075	1.141	1.217
10	Cooling capacity(kW)	1.213	1.192	1.181	1.148	1.127	1.105	1.083	1.062	1.029	0.997
	Power input capacity(kW)	0.729	0.785	0.823	0.890	0.928	0.993	1.022	1.079	1.146	1.221
11	Cooling capacity(kW)	1.246	1.224	1.213	1.179	1.157	1.135	1.113	1.090	1.057	1.024
	Power input capacity(kW)	0.731	0.789	0.827	0.893	0.931	0.997	1.026	1.083	1.150	1.226
12	Cooling capacity(kW)	1.277	1.254	1.243	1.209	1.186	1.163	1.140	1.118	1.083	1.049
	Power input capacity(kW)	0.738	0.796	0.834	0.901	0.940	1.006	1.036	1.093	1.160	1.237
13	Cooling capacity(kW)	1.310	1.287	1.275	1.240	1.217	1.193	1.170	1.146	1.111	1.076
	Power input capacity(kW)	0.738	0.796	0.834	0.901	0.940	1.006	1.036	1.093	1.160	1.237
14	Cooling capacity(kW)	1.343	1.319	1.307	1.271	1.247	1.223	1.199	1.175	1.139	1.103
	Power input capacity(kW)	0.747	0.806	0.845	0.913	0.952	1.019	1.049	1.107	1.175	1.253
15	Cooling capacity(kW)	1.372	1.348	1.335	1.299	1.274	1.250	1.225	1.201	1.164	1.127
	Power input capacity(kW)	0.761	0.820	0.860	0.929	0.969	1.037	1.068	1.127	1.196	1.276

•Heating capacity and power input table

Water outlet temp.(°C)	Ambient temp.(°C)	-10	-5	0	5	7	10	15	21
25	Heating capacity(kW)	0.685	0.776	0.900	1.007	1.059	1.134	1.292	1.402
	Power input capacity(kW)	0.643	0.662	0.683	0.701	0.705	0.718	0.730	0.738
30	Heating capacity(kW)	0.680	0.770	0.893	1.000	1.051	1.126	1.282	1.392
	Power input capacity(kW)	0.701	0.722	0.746	0.765	0.769	0.783	0.796	0.805
35	Heating capacity(kW)	0.677	0.767	0.890	0.996	1.047	1.121	1.277	1.386
	Power input capacity(kW)	0.761	0.784	0.810	0.831	0.835	0.850	0.864	0.874
40	Heating capacity(kW)	0.672	0.762	0.883	0.988	1.039	1.113	1.268	1.376
	Power input capacity(kW)	0.840	0.865	0.893	0.916	0.921	0.938	0.953	0.964
45	Heating capacity(kW)	0.647	0.733	0.850	0.951	1.000	1.071	1.220	1.324
	Power input capacity(kW)	0.912	0.939	0.969	0.995	1.000	1.018	1.035	1.046
50	Heating capacity(kW)	0.614	0.696	0.807	0.902	0.949	1.016	1.158	1.256
	Power input capacity(kW)	1.007	1.037	1.070	1.098	1.104	1.124	1.143	1.155

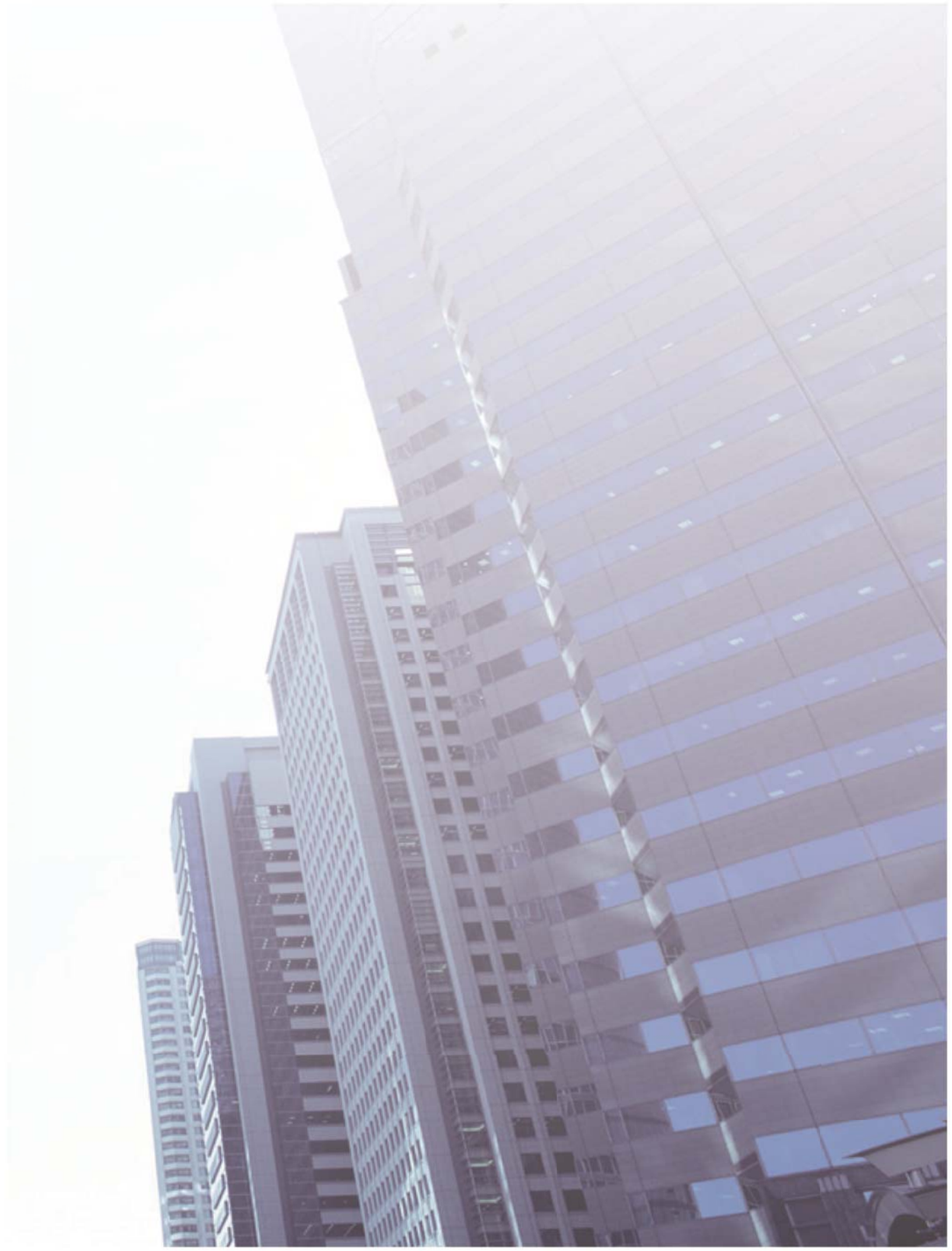

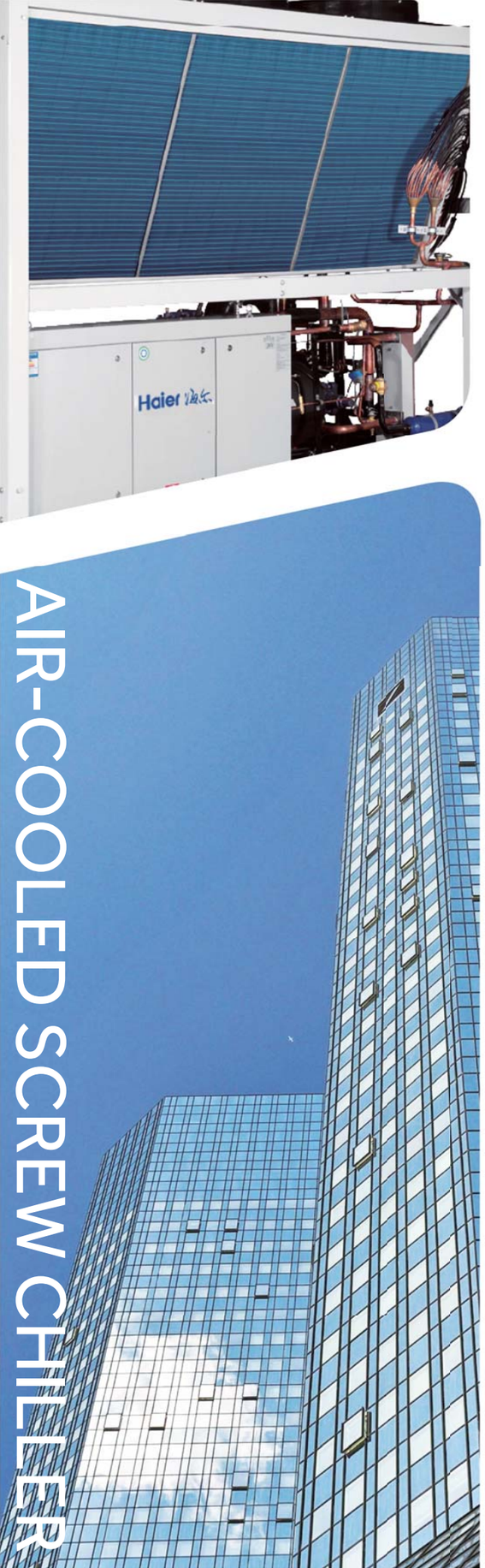

AIR-COOLED SCREW CHILLER R22

High Efficiency

High efficient compressor

The unit adopts high efficient twin-screw compressor.

- High efficiency: The compressor adopt 5:6 non-symmetry bear design, large volume, high efficiency.
- The units adopt multi-stage adjustment, each unit can realize 25%-50%-75%-100% volume control, suit for various condition, high part load EER value.
- Motor adopts Y-Δ start method, low start current, low impact to the power network.
- High precise manufacturing process, avoid any leakage, increase the compressor efficiency.
- The inner refrigerant suction system is cooled by the refrigerant, avoid any capacity loss.
- The suction side adopt temp. insulation material, avoid any condensing and energy loss.

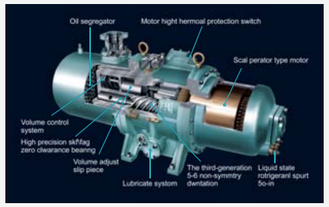

V-shape condenser

Condenser adopts the copper tube & hydrophilic aluminum fin coil type structure, the appearance is V type, this design increases the heat exchange area, reduces the temp. differences, thus increases the heat exchange efficiency by 20%.

SHELL & TUBE heat exchanger

- The SHELL & TUBE heat exchanger adopts high efficiency copper pipe.
- In cooling mode, SHELL & TUBE heat exchanger is as the evaporator, while, in heating mode, it is as the condenser.
- In the SHELL & TUBE heat exchanger, the freezed water will flow out of the copper pipe, while the refrigerant flowing in the copper pipe.
- There is the heat insulation material covering the SHELL & TUBE heat exchanger.

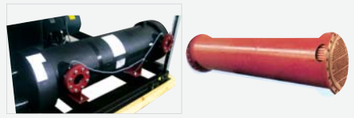

High efficient parts

Thermal expansion valve

The system adopt 1 set for cooling and heating operation (only for 247/300 model).

The system adopt 5 sets (1 for cooling and 4 for heating operation) thermal expansion valves, separate the liquid equally, prolong the heat exchanger's defrost time, high efficiency.

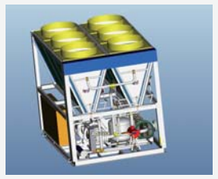

Easy Installation

Easy installation

- All the units charged refrigerant & connected compressor wires & control wires, and passed insulation and anti-voltage test before shipping.
- The units adopt modular design, easy for shipping and installation.
- The units output part have special connection wire, can realize inter-lock control with the cooling water pump.

High Reliality

System protections

The unit is equipped with safety device to confirm the safe operation. When one safety device acts, the failure indicator will light, and the corresponding function will stop, while the other function is normal.

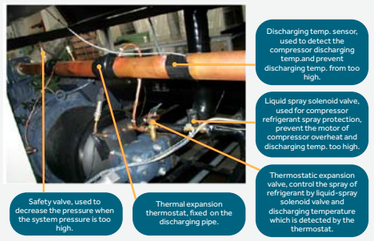

Convenience

Electrical control

- The unit can realize remote operation by touch screen contoller. when abnormal, the failure information will display on the crystal touch screen automatically.
- The unit can realize the interlock between the cooling/chilled water pump and the master unit.
- The control of water temperature will act according to the water outlet temperature.
- The unit can realize compulsorily unit quantity control and compulsorily capacity control for the unit with several compressors.
- When failure occurs, the normal compressor can continue running (for the unit with several compressors).
- When abnormal, the unit can monitor the current water temperature, operation time.
- In operation, the unit can monitor the water temperature, capacity state, operation time, etc to save operator's time and manage easily.

System Mode: Heating	HH:MM
Outlet temp.	-12.3℃
Inlet temp.	-12.3℃
RUN	Rem.Local
Query / Reset	Setting / Control

AIR-COOLED SCREW CHILLER

MODEL			CI0247AAND	CI0247AANE	CI0300AAND	CI0300AANE
Cooling	Cooling capacity	kW	240	240	290	290
	Power input	kW	82	82	96	96
	Running current	A	136	136	164	164
Heating	Heating capacity	kW	255	255	304.5	304.5
	Power input	kW	81.5	81.5	95.5	95.5
	Running current	A	136	136	164	164
Max.Power input		kW	99.4	99.4	119.6	119.6
Max. running current		A	168	168	201	201
Power supply		Ph/V/Hz	3/380/50			
Refrigerant throttle type			The thermal expansion valve			
Capacity control			25%,50%,75%,100%			
Safe protection			High and low pressure protection, safe protection, water-lack delay protection, automatic antifreezing protection, fan motor overload protection, overheating protection, phase lack & sequence protection			
Compressor	Type		Semi-Hermetic screw chiller			
	Quantity		1	1	1	1
	Input power	kW	75.6	75.6	86.4	86.4
Refrigerant	Type		R22			
	Charge	kg	60	60	78	78
Air side heat exchanger	Type		Inner grooved copper pipe & hydrophilic aluminum fin coil			
	Fan power	kW	1.6×4	1.6×4	1.6×6	1.6×6
	Fan type		Axial fan with low nosie			
	Fan quantity		4	4	6	6
Water side heat exchanger	Type		Dry type Shell & Tube heat exchanger			
	Rated water flow	m³/h	41	41	50	50
	Inlet/outlet pipe	DN	80	80	100	100
	Water dirt coefficient	m².°C/kW	0.018			
	Standard pressure	MPa	1.0			
	Water resistance	KPa	30	30	41	41
External dimension	Unit length	mm	2554	2554	3250	3250
	Unit width	mm	2150	2150	2150	2150
	Unit height	mm	2520	2520	2540	2540
Package dimension	Unit length	mm	2554	2554	3500	3500
	Unit width	mm	2200	2200	2250	2250
	Unit height	mm	2580	2580	2630	2630
Weight	Unit weight	kg	2430	2430	2800	2800
	Gross weight	kg	2480	2480	2880	2880
	Operation weight	kg	2624	2624	3024	3024

Note: 1.The CI** AAND is the master unit ,CI**AANE is the slave unit. Every system can be 4 units maximum , with one master unit only;
2. The chiller running weight is 1.05-1.1 times net weight;
3.Due to our policy of innovation some specifications may be changed without notification.

AIR-COOLED SCREW CHILLER

MODEL			CI0353AAND	CI0353AANE
Cooling	Cooling capacity	kW	350	350
	Power input	kW	115	115
	Running current	A	194	194
Heating	Heating capacity	kW	370	370
	Power input	kW	114.5	114.5
	Running current	A	194	194
Max.Power input		kW	141.6	141.6
Max. running current		A	237	237
Power supply		Ph/V/Hz	3/380/50	
Refrigerant throttle type			The thermal expansion valve	
Capacity control			25%,50%,75%,100%	
Safe protection			High and low pressure protection, safe protection, water-lack delay protection, automatic antifreezing protection, fan motor overload protection, overheating protection, phase lack & sequence protection	
Compressor	Type		Semi-Hermetic screw chiller	
	Quantity		1	1
	Input power	kW	105.4	105.4
Refrigerant	Type		R22	
	Charge	kg	80	80
Air side heat exchanger	Type		Inner grooved copper pipe & hydrophilic aluminum fin coil	
	Fan power	kW	1.6×6	1.6×6
	Fan type		Axial fan with low nosie	
	Fan quantity		6	6
Water side heat exchanger	Type		Dry type Shell & Tube heat exchanger	
	Rated water flow	m³/h	60	60
	Inlet/outlet pipe	DN	125	125
	Water dirt coefficient	m².°C/kW	0.018	
	Standard pressure	MPa	1.0	
	Water resistance	KPa	60	60
External dimension	Unit length	mm	3250	3250
	Unit width	mm	2150	2150
	Unit height	mm	2540	2540
Package dimension	Unit length	mm	3500	3500
	Unit width	mm	2250	2250
	Unit height	mm	2630	2630
Weight	Unit weight	kg	3350	3350
	Gross weight	kg	3430	3430
	Operation weight	kg	3618	3618

Note: 1.The CI** AAND is the master unit ,CI**AANE is the slave unit. Every system can be 4 units maximum , with one master unit only;
2. The chiller running weight is 1.05-1.1 times net weight;
3.Due to our policy of innovation some specifications may be changed without notification.

MODEL			CI0400AAND	CI0400AANE
Cooling	Cooling capacity	kW	390	390
	Power input	kW	129	129
	Running current	A	240	240
Heating	Heating capacity	kW	409.5	409.5
	Power input	kW	128.5	128.5
	Running current	A	240	240
Max.Power input		kW	162	162
Max. running current		A	289	289
Power supply		Ph/V/Hz	3/380/50	
Refrigerant throttle type			The thermal expansion valve	
Capacity control			25%,50%,75%,100%	
Safe protection			High and low pressure protection, safe protection, water-lack delay protection, automatic antifreezing protection, fan motor overload protection, overheating protection, phase lack & sequence protection	
Compressor	Type		Semi-Hermetic screw chiller	
	Quantity		1	1
	Input power	kW	117	117
Refrigerant	Type		R22	
	Charge	kg	76	76
Air side heat exchanger	Type		Inner grooved copper pipe & hydrophilic aluminum fin coil	
	Fan power	kW	2.5×6	2.5×6
	Fan type		Axial fan with low nosie	
	Fan quantity		6	6
Water side heat exchanger	Type		Dry type Shell & Tube heat exchanger	
	Rated water flow	m^3/h	67	67
	Inlet/outlet pipe	DN	125	125
	Water dirt coefficient	m^2.°C/kW	0.018	
	Standard pressure	MPa	1.0	
	Water resistance	KPa	70	70
External dimension	Unit length	mm	3250	3250
	Unit width	mm	2150	2150
	Unit height	mm	2540	2540
Package dimension	Unit length	mm	3500	3500
	Unit width	mm	2250	2250
	Unit height	mm	2630	2630
Weight	Unit weight	kg	3550	3550
	Gross weight	kg	3630	3630
	Operation weight	kg	3634	3634

Note: 1.The CI** AAND is the master unit ,CI**AANE is the slave unit. Every system can be 4 units maximum , with one master unit only;
2.The chiller running weight is 1.05~1.1 times net weight;
3.Due to our policy of innovation some specifications may be changed without notification.

AIR-COOLED SCREW CHILLER

Temperature Conditions

WATER SIDE

Working mode	Nominal operating condition		Operating range	
	Inlet water temp. (°C)	Outlet water temp. (°C)	Outlet water temp. (°C)	Inlet water temp. (°C)
Coolling	12	7	5-15	8-21
Heating	40	45	30-55	25-50

AIR SIDE

Working mode	Nominal operating condition		Operating range
	Outdoor temp. (DB°C)	Outdoor temp. (WB°C)	Outdoor temp. (DB°C)
Coolling	35	-	18-43
Heating	7	6	-7-21

Note:1. Noise level is the average value measured at 2 meter to the unit, 1.5 meter high to the gound. 2. Unit total capacity is counted in the cooling condition. 3.The length of multi-module chiller is not included the 450mm maintenance space between modules.

Models Combinations

Model	A	B	C	D	E	F	G	H
Basic module	CI0247AAND	CI0247AANE	CI0300AAND	CI0300AANE	CI0353AAND	CI0353AANE	CI0400AAND	CI0400AANE
Model	CI0494AAND	CI0547AAND	CI0600AAND	CI0647AAND	CI0653AAND	CI0700AAND	CI0706AAND	CI0741AAND
Combination	1*A+1*B	1*A+1*D	1*A+1*F 1*C+1*D	1*A+1*H	1*C+1*F	1*C+1*H	1*E+1*F	1*A+2*B
Model	CI0753AAND	CI0794AAND	CI0800AAND	CI0847AAND	CI0894AAND	CI0900AAND	CI0947AAND	CI0953AAND
Combination	1*E+1*H	1*A+1*B+1*D	1*G+1*H	1*A+2*D	1*A+1*B+1*H	1*C+2*D	1*A+1*D+1*H	1*C+1*D+1*F
Model	CI0988AAND	CI1000AAND	CI1006AAND	CI1041AAND	CI1053AAND	CI1059AAND	CI1094AAND	CI1100AAND
Combination	1*A+3*B	1*A+1*F+1*H	1*C+2*F	1*A+2*B+1*D	1*C+1*F+1*H	1*E+2*F	1*A+1*B+2*D	1*C+2*H
Model	CI1106AAND	CI1141AAND	CI1147AAND	CI1153AAND	CI1194AAND	CI1200AAND		CI1247AAND
Combination	1*E+1*F+1*H	1*A+2*B+1*H	1*A+1*B+1*D+1*F	1*E+2*H 1*A+3*D	1*A+1*B+1*D+1*H	1*G+2*H 1*A+1*B+2*F	1*C+3*D 1*A+2*D+1*F	1*A+1*B+1*F+1*H
Model	CI1253AAND	CI1294AAND	CI1300AAND	CI1306AAND	CI1347AAND	CI1353AAND	CI1400AAND	CI1406AAND
Combination	1*A+1*D+2*F 1*C+2*D+1*F	1*A+1*B+2*H	1*A+1*D+1*F+1*H	1*C+1*D+2*F	1*A+1*D+2*H	1*C+1*D+1*F+1*H 1*C+3*F	1*C+1*D+2*H	1*C+2*F+1*H
Model	CI1412AAND	CI1453AAND	CI1459AAND	CI1500AAND	CI1506AAND	CI1553AAND	CI1600AAND	
Combination	1*E+3*F	1*C+1*F+2*H	1*E+2*F+1*H	1*C+3*H	1*E+1*F+2*H	1*E+3*H	1*G+3*H	

AIR-COOLED SCREW CHILLER

Unit Dimension Diagram

•CI0247AAND CI0247AANE Unit dimension

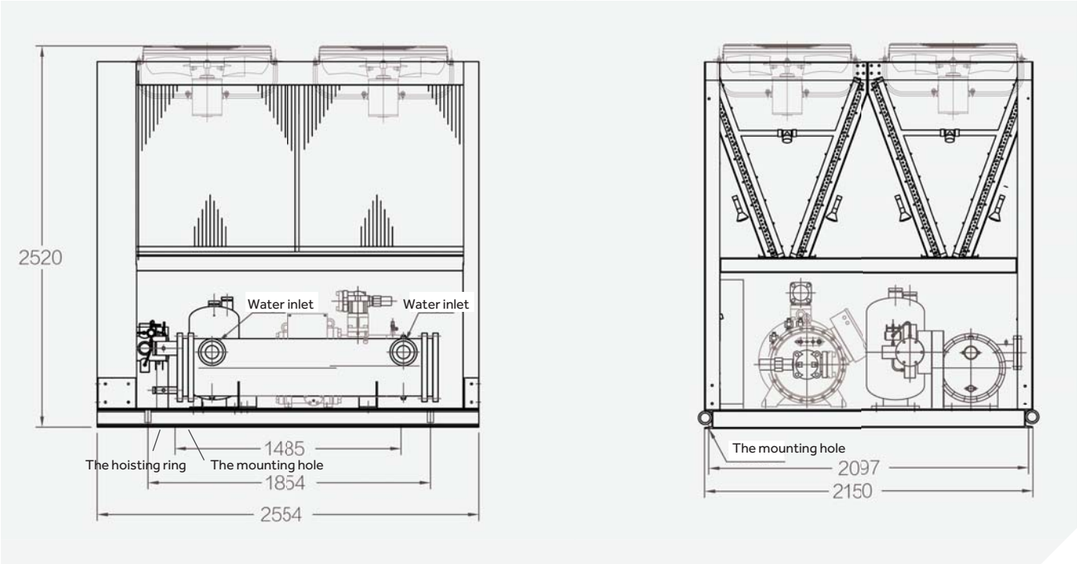

•CI0300AAND CI0300AANE CI0353AAND CI0353AANE CI0400AAND CI0400AANE Unit dimension

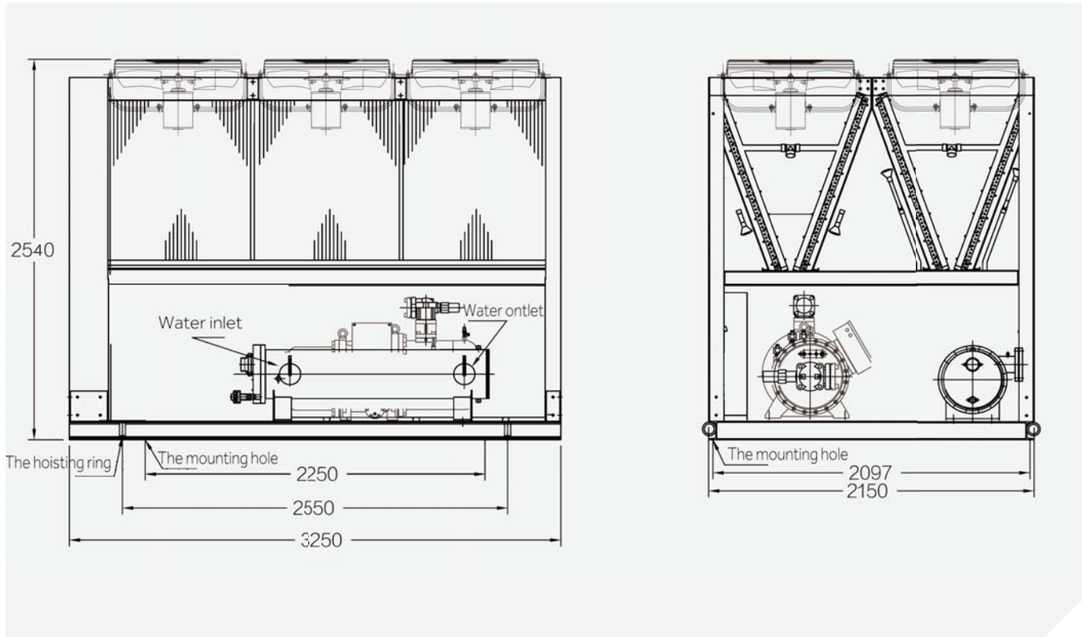

The Unit Installation Foundation Diagram

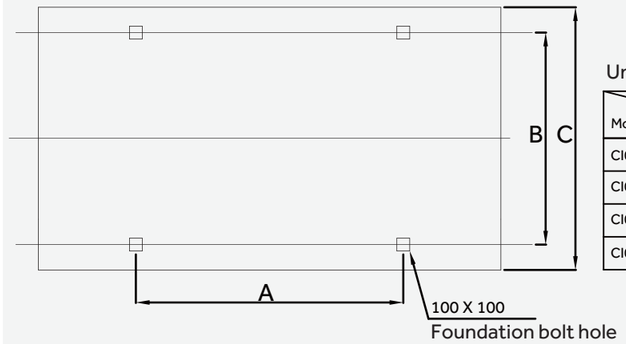

Unit base size: mm

Model \ Dimension	A	B	C
CI0247AAND/CI0247AANE	1485	2097	2387
CI0300AAND/CI0300AANE	2250	2097	2387
CI0353AAND/CI0353AANE	2250	2097	2387
CI0400AAND/CI0400AANE	2250	2097	2387

The Unit Installation & Maintenance Space

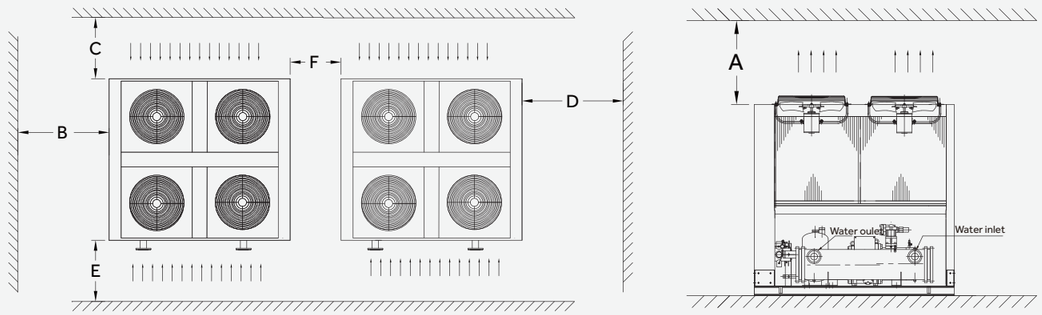

Installation space(mm)					
A	B	C	D	E	F
≥5000	≥2400	≥1500	≥2400	≥1500	≥1200

AIR-COOLED SCREW CHILLER

Performance Table

•Cooling capacity and power input table

Water outlet temp.(°C)	Ambient temp.(°C)	18	21	24	27	30	33	35	38	41	43
5	Cooling capacity(kW)	1.069	1.050	1.040	1.012	0.993	0.974	0.955	0.935	0.907	0.878
	Power input capacity(kW)	0.700	0.754	0.791	0.854	0.891	0.953	0.982	1.036	1.100	1.173
6	Cooling capacity(kW)	1.090	1.070	1.061	1.032	1.012	0.993	0.973	0.954	0.925	0.895
	Power input capacity(kW)	0.706	0.761	0.798	0.862	0.899	0.962	0.991	1.046	1.110	1.184
7	Cooling capacity(kW)	1.120	1.100	1.090	1.060	1.040	1.020	1.000	0.980	0.950	0.920
	Power input capacity(kW)	0.713	0.768	0.805	0.870	0.907	0.971	1.000	1.056	1.120	1.195
8	Cooling capacity(kW)	1.157	1.137	1.126	1.095	1.075	1.054	1.033	1.013	0.982	0.951
	Power input capacity(kW)	0.720	0.776	0.814	0.879	0.917	0.981	1.011	1.067	1.132	1.207
9	Cooling capacity(kW)	1.186	1.165	1.154	1.122	1.101	1.080	1.059	1.038	1.006	0.974
	Power input capacity(kW)	0.726	0.782	0.820	0.886	0.924	0.989	1.018	1.075	1.141	1.217
10	Cooling capacity(kW)	1.213	1.192	1.181	1.148	1.127	1.105	1.083	1.062	1.029	0.997
	Power input capacity(kW)	0.729	0.785	0.823	0.890	0.928	0.993	1.022	1.079	1.146	1.221
11	Cooling capacity(kW)	1.246	1.224	1.213	1.179	1.157	1.135	1.113	1.090	1.057	1.024
	Power input capacity(kW)	0.731	0.789	0.827	0.893	0.931	0.997	1.026	1.083	1.150	1.226
12	Cooling capacity(kW)	1.277	1.254	1.243	1.209	1.186	1.163	1.140	1.118	1.083	1.049
	Power input capacity(kW)	0.738	0.796	0.834	0.901	0.940	1.006	1.036	1.093	1.160	1.237
13	Cooling capacity(kW)	1.310	1.287	1.275	1.240	1.217	1.193	1.170	1.146	1.111	1.076
	Power input capacity(kW)	0.738	0.796	0.834	0.901	0.940	1.006	1.036	1.093	1.160	1.237
14	Cooling capacity(kW)	1.343	1.319	1.307	1.271	1.247	1.223	1.199	1.175	1.139	1.103
	Power input capacity(kW)	0.747	0.806	0.845	0.913	0.952	1.019	1.049	1.107	1.175	1.253
15	Cooling capacity(kW)	1.372	1.348	1.335	1.299	1.274	1.250	1.225	1.201	1.164	1.127
	Power input capacity(kW)	0.761	0.820	0.860	0.929	0.969	1.037	1.068	1.127	1.196	1.276

•Heating capacity and power input table

Water outlet temp.(°C)	Ambient temp.(°C)	-10	-5	0	5	7	10	15	21
25	Heating capacity(kW)	0.685	0.776	0.900	1.007	1.059	1.134	1.292	1.402
	Power input capacity(kW)	0.643	0.662	0.683	0.701	0.705	0.718	0.730	0.738
30	Heating capacity(kW)	0.680	0.770	0.893	1.000	1.051	1.126	1.282	1.392
	Power input capacity(kW)	0.701	0.722	0.746	0.765	0.769	0.783	0.796	0.805
35	Heating capacity(kW)	0.677	0.767	0.890	0.996	1.047	1.121	1.277	1.386
	Power input capacity(kW)	0.761	0.784	0.810	0.831	0.835	0.850	0.864	0.874
40	Heating capacity(kW)	0.672	0.762	0.883	0.988	1.039	1.113	1.268	1.376
	Power input capacity(kW)	0.840	0.865	0.893	0.916	0.921	0.938	0.953	0.964
45	Heating capacity(kW)	0.647	0.733	0.850	0.951	1.000	1.071	1.220	1.324
	Power input capacity(kW)	0.912	0.939	0.969	0.995	1.000	1.018	1.035	1.046
50	Heating capacity(kW)	0.614	0.696	0.807	0.902	0.949	1.016	1.158	1.256
	Power input capacity(kW)	1.007	1.037	1.070	1.098	1.104	1.124	1.143	1.155

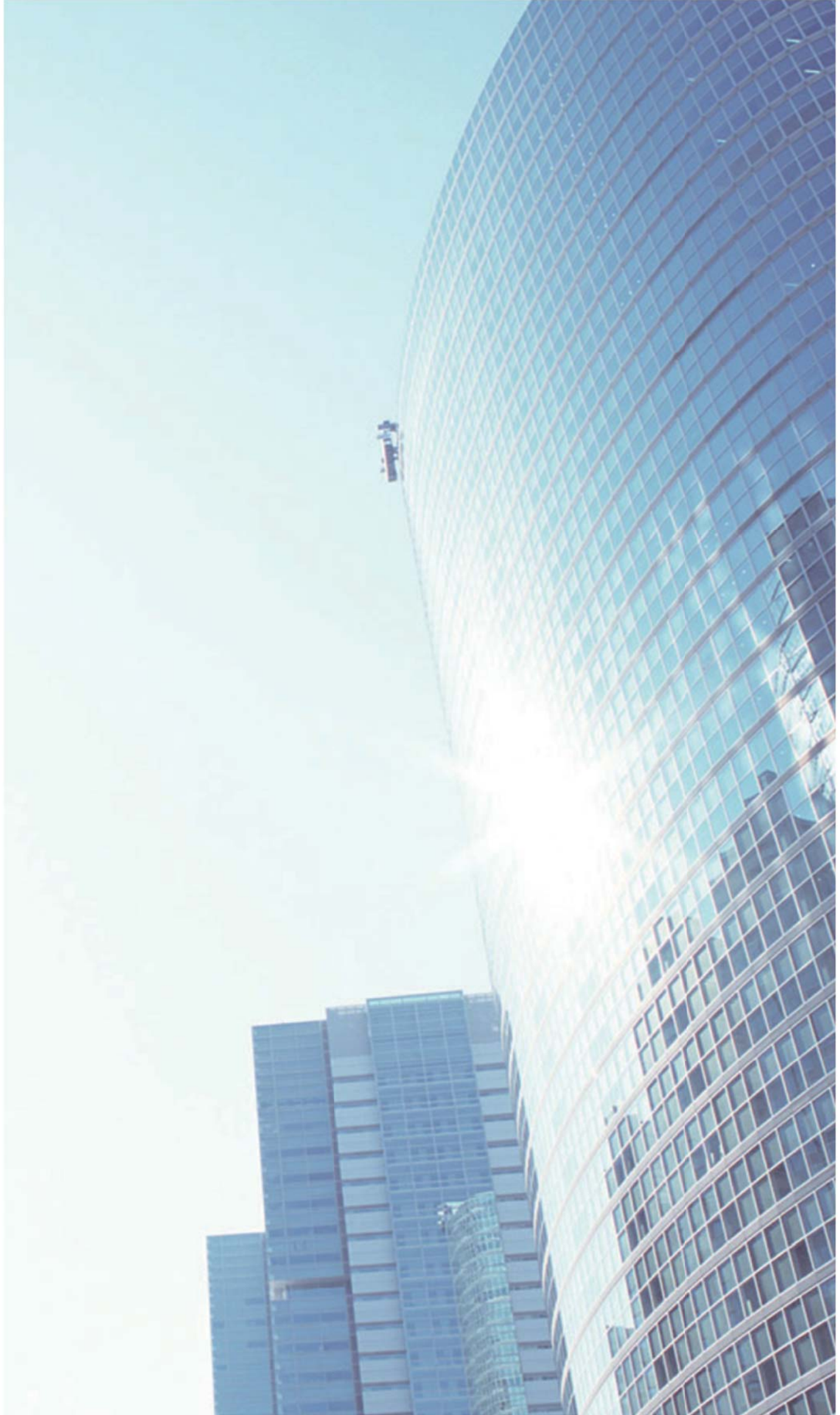

WATER-COOLED SCREW CHILLER

WATER-COOLED SCREW CHILLER R134a

High Efficiency

High efficient compressor

- Adopt international famous brand twin-screw compressor.
- 5:6 structure.
- Slide valve.
- Save 10% energy comparing with common screw compressor.

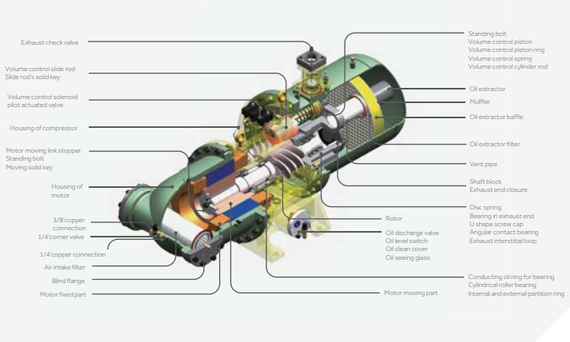

Compressor cut-view

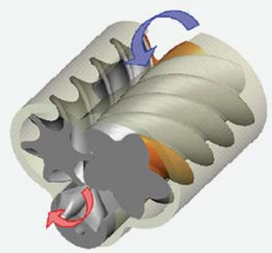

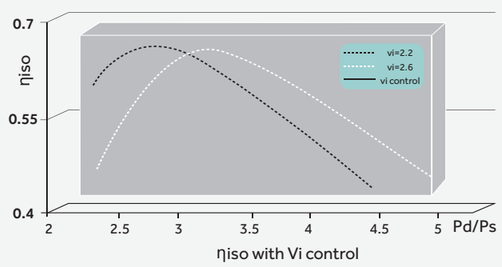

High Efficiency

Sub cooling design

The condenser have the sub cooling design , which makes the refrigerant cooling for another degrees , capacity increase 6 %

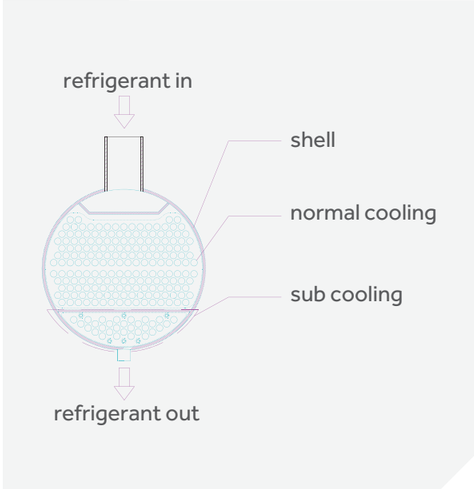

Flooded type heat exchanger

- Flooded type heat exchanger, high efficient heat exchange, easy to clean dirt and the whole seal has no leakage.
- Innovative single path design, reduce water side resistance loss.
- Particular inner circle heat transfer and liquid balanced board design make every tube can transfer heat well.

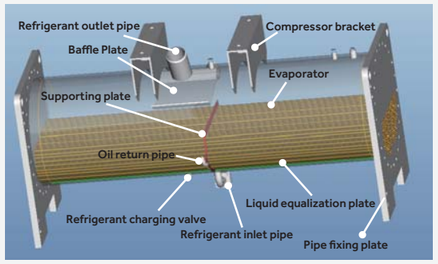

High Reliability

Tornado type oil separator

- Tornado patent design.
- Oil separator efficiency reaches more than 99.9%.
- Reduce refrigerant side thermo resistance effectively.
- Increase heat exchange efficiency.

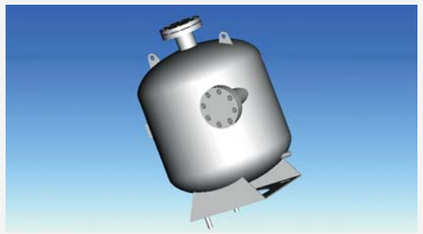

Protection device

There are lots of protection device to ensure the equipment to run stably.

Compressor motor protector:

ensure compressor run normally

Pressure switch:

keep the products run in the normal range pressure.

Pressure sensor :

second protection in pressure control

Water flow switch:

ensure the water flow to equipment when product turn on

Safety valve:

In case of fire , stop the equipment from dangerous

WATER-COOLED SCREW CHILLER

Easy Installation

Reserved refrigerant

Standard Products is with refrigerant inside,installer just need install the pipe and power supply.

Standard water flow switch

Water flow switch is standard part , no need to purchase another.

Standard bar clasp and connection pipe assembly

Bar clasp and connection pipe assembly are standard part, the pipe connection is easier.

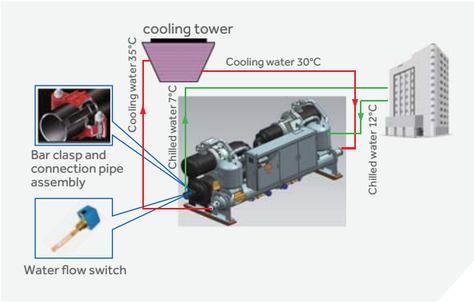

Convenience

Functional control screen

7 inch colorful touch screen.

Status: Water temperature, pressure/current/pump/running curve/history curve

Timer: Weekly timer

Error: Error history check

User: Local control/BMS control

PLC design

PLC programmable controller improve the reaction speed and reliability;

R134a WATER-COOLED SCREW CHILLER

AHRI CERTIFIED® www.ahridirectory.org

MODEL			CI0350PWNC	CI0425PWNC	CI0530PWNC	CI0670PWNC	CI0750PWNC
Cooling capacity		RT	100	121	150	191	215
		kW	350	425	528	670	755
Power input		kW	62.5	75.5	93.5	117.0	133.0
Max power input		kW	89	108	136	168	200
EER		W/W	5.60	5.63	5.65	5.73	5.68
Starting current		A	450	450	704	768	1010
Max. running current		A	150	183	226	280	343
Compressor	Type		1				
	Quantity		Semi-Hermetic screw chiller				
Capacity control		Ph/V/Hz	25%, 50%, 75%, 100%				
Power supply			3N~.380V.50Hz				
Controller type			PLC				
Refrigerant throttle type			EEV				
Refrigerant	Type		R134a				
Evaporator	Type		flooded type				
	Water inlet/outlet temp.	°C	12°C/7°C				
	Rated water flow	m^3/h	60	73	91	115	130
	Water side resistance	KPa	99	86	97	99	99
	Inlet/outlet pipe	DN(mm)	100	125	125	125	150
	Water dirt coefficient	$m^2.°C/kW$	0.018				
	Standard pressure	MPa	1.0				
Condenser	Type		Shell&tube heat exchanger				
	Water inlet/outlet temp.	°C	30°C/35°C				
	Rated water flow	m^3/h	71	86	107	135	153
	Water side resistance	KPa	97	84	98	99	99
	Inlet/outlet pipe	DN(mm)	100	125	125	125	150
	Water dirt coefficient	$m^2.°C/kW$	0.044				
	Standard pressure	MPa	1.0				
External dimension	Unit length	mm	2850	2850	3400	3400	3650
	Unit width	mm	1600	1700	1850	1900	2050
	Unit height	mm	1900	1950	2000	2050	2150
Package dimension	Unit length	mm	3050	3050	3600	3600	3850
	Unit width	mm	1700	1800	1950	2000	2150
	Unit height	mm	2250	2300	2350	2400	2500
Weight	Unit weight	kg	2800	2950	3450	3600	4350
	Gross weight	kg	2900	3050	3550	3700	4470
	Operation weight	kg	3000	3170	3690	3880	4680

R134a WATER-COOLED SCREW CHILLER

AHRI CERTIFIED®
www.ahridirectory.org

MODEL			CI0810PWNC	CI0860PWNC	CI0960PWNC	CI1070PWNC	CI1160PWNC	CI1350PWNC
Cooling capacity		RT	230	245	275	306	330	384
		kW	810	860	966	1075	1160	1350
Power input		kW	142.0	153.0	172.0	190.0	205.0	232.0
Max power input		kW	200	216	246	272	290	336
EER		W/W	5.70	5.62	5.62	5.66	5.66	5.82
Starting current		A	619	633	909	930	946	1048
Max. running current		A	338	366	410	452	484	560
Compressor	Type		2					
	Quantity		Semi-Hermetic screw chiller					
Capacity control		Ph/V/Hz	12.5%,25%，37.5%,50%，62.5%,75%，87.5%,100%					
Power supply			3N~.380V.50Hz					
Controller type			PLC					
Refrigerant throttle type			EEV					
Refrigerant	Type		R134a					
Evaporator	Type		flooded type					
	Water inlet/outlet temp.	°C	12°C/7°C					
	Rated water flow	m³/h	139	148	166	185	200	232
	Water side resistance	KPa	65	53	65	99	99	66
	Inlet/outlet pipe	DN(mm)	150	150	150	200	200	200
	Water dirt coefficient	m².°C/kW	0.018					
	Standard pressure	MPa	1.0					
Condenser	Type		Shell&tube heat exchanger					
	Water inlet/outlet temp.	°C	30°C/35°C					
	Rated water flow	m³/h	164	174	196	218	235	272
	Water side resistance	KPa	96	80	74	99	99	65
	Inlet/outlet pipe	DN(mm)	150	150	150	200	200	200
	Water dirt coefficient	m².°C/kW	0.044					
	Standard pressure	MPa	1.0					
External dimension	Unit length	mm	4600	4600	4600	5850	5850	5850
	Unit width	mm	2000	2050	2050	2100	2100	2150
	Unit height	mm	2050	2150	2250	2400	2450	2450
Package dimension	Unit length	mm	4800	4800	4800	6050	6050	6050
	Unit width	mm	2100	2150	2150	2200	2200	2250
	Unit height	mm	2400	2500	2600	2750	2800	2800
Weight	Unit weight	kg	5150	5250	5600	7900	8100	8400
	Gross weight	kg	5300	5400	5750	8080	8280	8580
	Operation weight	kg	5500	5620	5990	8350	8570	8920

WATER-COOLED SCREW CHILLER

Unit Dimension Diagram

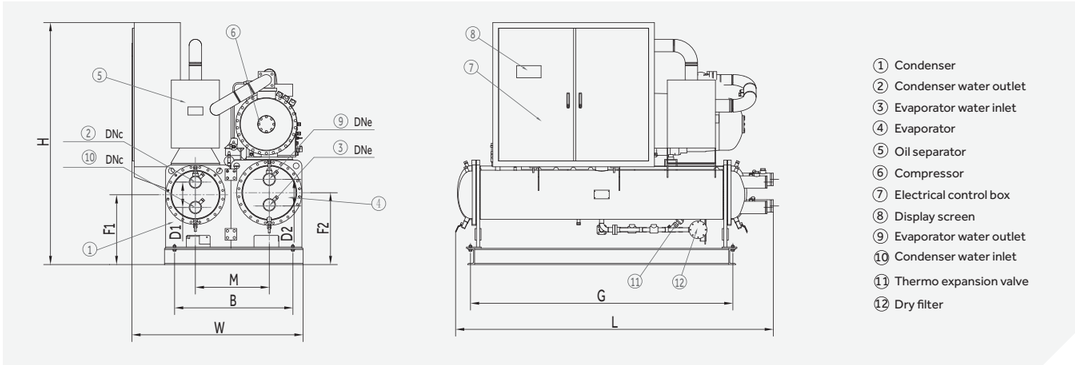

Model	Dimension mm			Installation Dimension mm		Pipe Connection Dimension mm						
	L	W	H	B	G	D1	D2	F1	F2	M	DNe	DNc
CI0350PWNC	2850	1600	1900	985	2262	220	230	605	623	640	DN100	DN100
CI0425PWNC	2850	1700	1950	985	2262	220	260	605	623	640	DN125	DN125
CI0530PWNC	3400	1850	2000	1035	2262	220	260	605	623	640	DN125	DN125
CI0670PWNC	3400	1900	2050	1160	2262	220	260	622	665	683	DN125	DN125
CI0750PWNC	3650	2050	2150	1160	2762	240	260	507	550	733	DN150	DN150

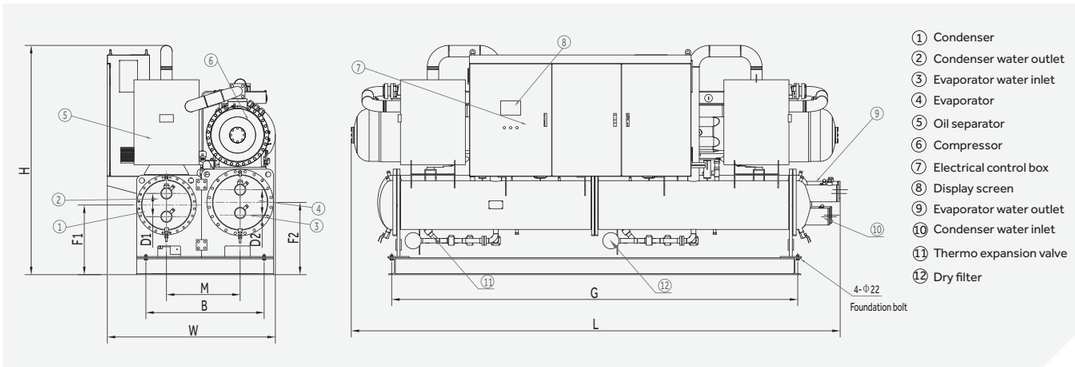

Model	Dimension mm			Installation Dimension mm		Pipe Connection Dimension mm						
	L	W	H	B	G	D1	D2	F1	F2	M	DNe	DNc
CI0810PWNC	4600	2000	2050	1035	3835	240	260	660	685	698	DN150	DN150
CI0860PWNC	4600	2050	2150	1035	3835	240	260	660	685	698	DN150	DN150
CI0960PWNC	4600	2050	2250	1160	3835	240	260	660	685	698	DN150	DN150
CI1070PWNC	5850	2100	2400	1160	4435	240	260	660	685	698	DN200	DN200
CI1160PWNC	5850	2100	2450	1160	4435	260	330	683	710	755	DN200	DN200
CI1350PWNC	5850	2150	2450	1270	4435	260	360	708	760	830	DN200	DN200

WATER-COOLED SCREW CHILLER

The Unit Installation Foundation Drawing

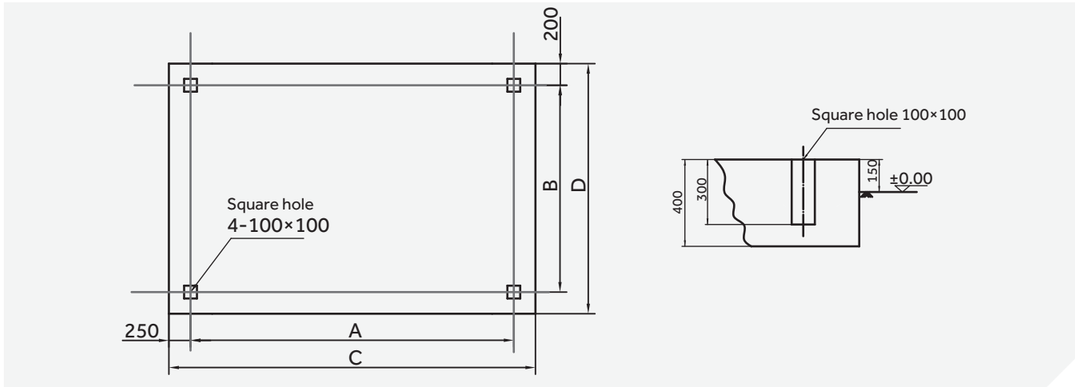

Model	Installation Dimension mm			
	A	B	C	D
CI0350PWNC	2262	985	2762	1385
CI0425PWNC	2262	985	2762	1385
CI0530PWNC	2262	1035	2762	1435
CI0670PWNC	2262	1160	2762	1460
CI0750PWNC	2762	1160	3262	1460

Model	Installation Dimension mm			
	A	B	C	D
CI0810PWNC	3835	1035	3735	1435
CI0860PWNC	3835	1035	4335	1435
CI0960PWNC	3835	1160	4335	1460
CI1070PWNC	4435	1160	4935	1460
CI1160PWNC	4435	1160	4935	1460
CI1350PWNC	4435	1270	4935	1670

Reserved Space Size

•Single compressor unit

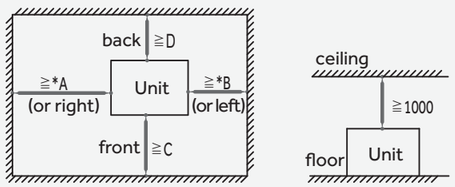

Dimmension:mm

Model	A	B	C	D
CI0350PWNC	2200	1000	1000	800
CI0425PWNC	2200	1000	1000	800
CI0530PWNC	2200	1000	1000	800
CI0670PWNC	2200	1000	1000	800
CI0750PWNC	2700	1000	1000	800

* The dimension with * is the reserved dimension with pipe connection right side,
if pipe connection left side the A will change to B, B will change to A;

•Double compressor unit

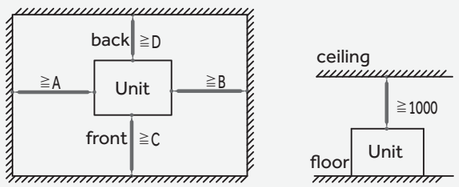

Dimmension:mm

Model	A	B	C	D
CI0810PWNC	1900	1900	1200	800
CI0860PWNC	1900	1900	1200	800
CI0960PWNC	1900	1900	1200	800
CI1070PWNC	2200	2200	1200	800
CI1160PWNC	2200	2200	1200	800
CI1350PWNC	2200	2200	1200	800

R134a WATER-COOLED SCREW CHILLER

MODEL			CI0350PWNB	CI0420PWNB	CI0525PWNB	CI0645PWNB
Cooling capacity		RT	100	119	150	183
		kW	351	420	528	645
Power input		kW	72	86	107	125
EER			4.88	4.88	4.93	5.16
Starting current		A	450	450	704	704
Max. running current		A	140	168	204	241
Safe protection			Overload protection; water-lack delay protection; automatic antifreezing protection, phase lack & sequence protection,low pressure protection; high pressure protection; Exhaust temperature protection; oil pressure difference protection,low oil level protection; pressure relief valve.			
Compressor	Type		Semi-Hermetic screw chiller			
	Quantity		1	1	1	1
Power supply		Ph/V/Hz	3/380/50			
Refrigerant throttle type			Orifice plate + butterfly valve			
Capacity control			25%, 50%, 75%, 100%			
Controller type			Fully automatic control by Microcomputer controller			
Refrigerant	Type		R134a			
	Charge	kg	120	125	125	175
Evaporator	Type		Flood type			
	Water inlet/outlet temp	°C	12°C/7°C			
	Inlet/outlet pipe	DN(mm)	125	125	125	125
	Rated water flow	m^3/h	60	72	91	111
	Water dirt coefficient	$m^2.°C/kW$	0.018			
	Standard pressure	MPa	1.0			
	Water side resistance	KPa	41	44	66	82
Condenser	Type		Shell & Tube heat exchanger			
	Water inlet/outlet temp	°C	30°C/35°C			
	Inlet/outlet pipe	DN(mm)	125	125	125	125
	Rated water flow	m^3/h	73	87	109	132
	Water dirt coefficient	$m^2.°C/kW$	0.044			
	Standard pressure	MPa	1.0			
	Water side resistance	KPa	78	67	69	88
External dimension	Unit length	mm	2830	2830	2830	3500
	Unit width	mm	1420	1420	1500	1250
	Unit height	mm	1950	2030	2100	2100
Package dimension	Unit length	mm	3030	3030	3030	3700
	Unit width	mm	1520	1520	1600	1350
	Unit height	mm	2150	2230	2300	2300
Weight	Unit weight	kg	2400	2450	2850	3400
	Gross weight	kg	2430	2480	2880	3430
	Operation weight	kg	2570	2630	3050	3640

Note: Due to our policy of innovation some specifications may be changed without notification.

Temperature Conditions

Nominal cooling				Operating range			
Chilled water		Cooling water		Chilled water		Cooling water	
Inlet water temp. (℃)	Outlet water temp. (℃)	Inlet water temp. (℃)	Outlet water temp. (℃)	Outlet temp. (℃)	Temp. difference between inlet & outlet (℃)	Inlet water temp. (℃)	Temp. difference between inlet & outlet (℃)
12	7	30	35	4-15	2.5-8	23-35	2.5-8

R134a WATER-COOLED SCREW CHILLER

MODEL			CI0720PWNB	CI0790PWNB	CI0880PWNB	CI1056PWNB
Cooling capacity		RT	204	225	252	300
		kW	718	791	886	1056
Power input		kW	136	154	164	194
EER			5.28	5.14	5.40	5.44
Starting current		A	768	768	1010	908
Max. running current		A	300	300	328	408
Safe protection			Overload protection; water-lack delay protection; automatic antifreezing protection, phase lack & sequence protection,low pressure protection; high pressure protection; Exhaust temperature protection; oil pressure difference protection,low oil level protection; pressure relief valve.			
Compressor	Type		Semi-Hermetic screw chiller			
	Quantity		1	1	1	2
Power supply		Ph/V/Hz	3/380/50			
Refrigerant throttle type			Orifice plate + butterfly valve			
Capacity control			25%, 50%, 75%, 100%			12.5%, 25%, 37.5%,50%, 62.5%, 75%, 87.5%,100%
Controller type			Fully automatic control by Microcomputer controller			
Refrigerant	Type		R134a			
	Charge	kg	190	215	215	220
Evaporator	Type		Flood type			
	Water inlet/outlet temp	°C	12°C/7°C			
	Inlet/outlet pipe	DN(mm)	150	150	150	150
	Rated water flow	m^3/h	123	136	152	182
	Water dirt coefficient	$m^2.°C/kW$	0.018			
	Standard pressure	MPa	1.0			
	Water side resistance	KPa	84	48	55	50
Condenser	Type		Shell & Tube heat exchanger			
	Water inlet/outlet temp	°C	30°C/35°C			
	Inlet/outlet pipe	DN(mm)	150	150	150	150
	Rated water flow	m^3/h	147	163	181	215
	Water dirt coefficient	$m^2.°C/kW$	0.044			
	Standard pressure	MPa	1.0			
	Water side resistance	KPa	89	87	88	65
External dimension	Unit length	mm	3580	3580	3600	4800
	Unit width	mm	1380	1450	1480	1500
	Unit height	mm	2200	2200	2250	2100
Package dimension	Unit length	mm	3780	3780	3800	5000
	Unit width	mm	1480	1550	1580	1600
	Unit height	mm	2400	2400	2450	2300
Weight	Unit weight	kg	3430	3650	3780	4950
	Gross weight	kg	3460	3680	3810	4980
	Operation weight	kg	3730	4000	4160	5335

Note: Due to our policy of innovation some specifications may be changed without notification.

R134a WATER-COOLED SCREW CHILLER

MODEL			CI1250PWNB	CI1400PWNB	CI1520PWNB	CI1700PWNB	CI2110PWNB
Cooling capacity		RT	356	395	433	485	600
		kW	1252	1389	1523	1705	2110
Power input		kW	221	246	270	301	375
EER			5.67	5.65	5.64	5.66	5.63
Starting current		A	945	1009	1068	1338	1832
Max. running current		A	482	542	600	656	800
Safe protection			Overload protection; water-lack delay protection; automatic antifreezing protection, phase lack & sequence protection,low pressure protection; high pressure protection; Exhaust temperature protection; oil pressure difference protection,low oil level protection; pressure relief valve.				
Compressor	Type		Semi-Hermetic screw chiller				
	Quantity		2	2	2	2	2
Power supply		Ph/V/Hz	3/380/50				
Refrigerant throttle type			Orifice plate + butterfly valve				
Capacity control			12.5%, 25%, 37.5%, 50%, 62.5%, 75%, 87.5%, 100%				
Controller type			Fully automatic control by Microcomputer controller				
Refrigerant	Type		R134a				
	Charge	kg	270	280	330	350	385
Evaporator	Type		Flood type				
	Water inlet/outlet temp	°C	12°C/7°C				
	Inlet/outlet pipe	DN(mm)	200	200	200	200	200
	Rated water flow	m^3/h	215	239	262	293	363
	Water dirt coefficient	$m^2.°C/kW$	0.018				
	Standard pressure	MPa	1.0				
	Water side resistance	KPa	60	51	63	62	65
Condenser	Type		Shell & Tube heat exchanger				
	Water inlet/outlet temp	°C	30°C/35°C				
	Inlet/outlet pipe	DN(mm)	200	200	200	200	200
	Rated water flow	m^3/h	253	281	308	345	427
	Water dirt coefficient	$m^2.°C/kW$	0.044				
	Standard pressure	MPa	1.0				
	Water side resistance	KPa	74	62	83	70	71
External dimension	Unit length	mm	4850	4900	5350	5950	6010
	Unit width	mm	1600	1600	1700	1800	2250
	Unit height	mm	2100	2200	2200	2250	2650
Package dimension	Unit length	mm	5050	5100	5550	6150	6210
	Unit width	mm	1700	1700	1800	1900	2350
	Unit height	mm	2300	2400	2400	2450	2850
Weight	Unit weight	kg	5800	6100	6280	6500	8930
	Gross weight	kg	5840	6140	6320	6540	8970
	Operation weight	kg	6320	6550	6710	7000	9400

Note: Due to our policy of innovation some specifications may be changed without notification.

WATER-COOLED SCREW CHILLER

Unit Dimension Diagram

• Single compressor unit

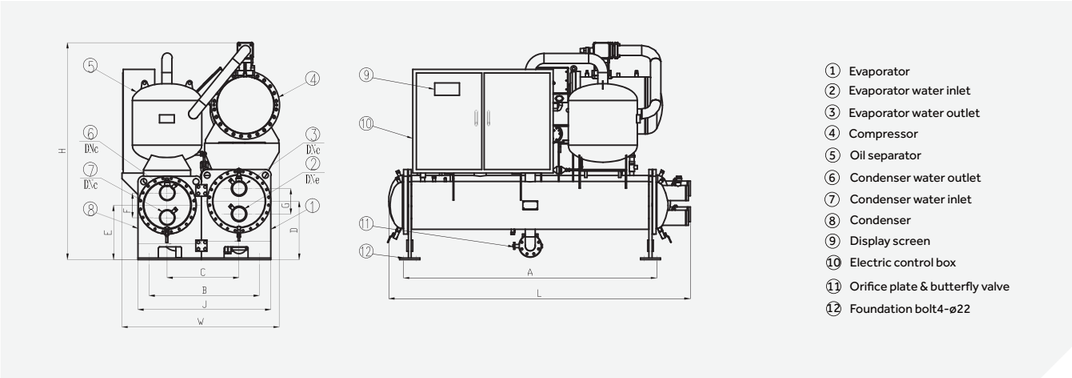

mm

Code / Model	Dimension			Installation dimension		Dimension of pipe							
	L	W	H	A	B	C	D	E	F	G	J	DNe	DNc
CI0350PWNB	2830	1420	1950	2270	900	570	565	515	180	220	1090	DN125	DN125
CI0420PWNB	2830	1420	2030	2270	900	570	565	515	180	220	1090	DN125	DN125
CI0525PWNB	2830	1500	2100	2270	900	570	565	515	180	220	1090	DN125	DN125
CI0645PWNB	3500	1250	2100	2980	900	590	565	540	180	220	1130	DN125	DN125
CI0720PWNB	3580	1380	2200	2980	1160	642	592	564	220	220	1245	DN150	DN150
CI0790PWNB	3580	1450	2200	2980	1160	642	592	564	220	220	1245	DN150	DN150
CI0880PWNB	3600	1480	2250	2980	1160	642	592	564	220	220	1245	DN150	DN150

• The double compressores unit

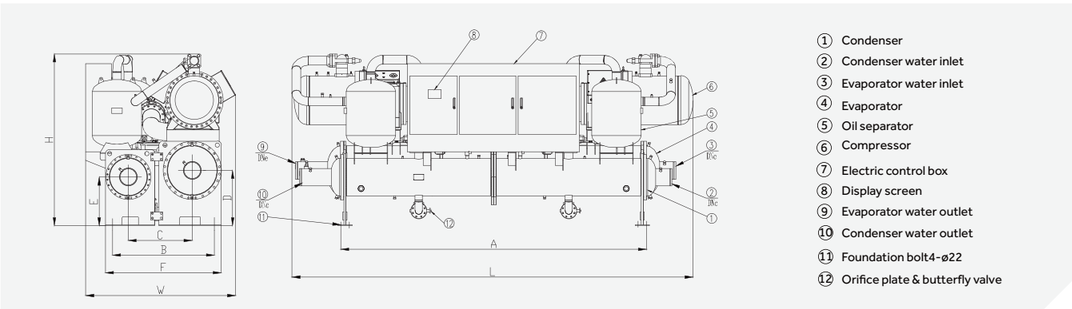

mm

Code / Model	Dimension			Installation dimension		Dimension of pipe					
	L	W	H	A	B	C	D	E	F	DNe	DNc
CI1056PWNB	4800	1500	2100	3835	1035	610	570	535	1155	DN150	DN150
CI1250PWNB	4850	1600	2100	3835	1035	602	585	560	1175	DN200	DN200
CI1400PWNB	4900	1600	2200	3835	1035	602	585	560	1175	DN200	DN200
CI1520PWNB	5350	1700	2200	4435	1035	632	585	565	1230	DN200	DN200
CI1700PWNB	5950	1800	2250	4435	1035	632	585	565	1230	DN200	DN200
CI2110PWNB	6010	2250	2650	4435	1290	845	664	589	1550	DN200	DN200

The Unit Installation Foundation Drawing

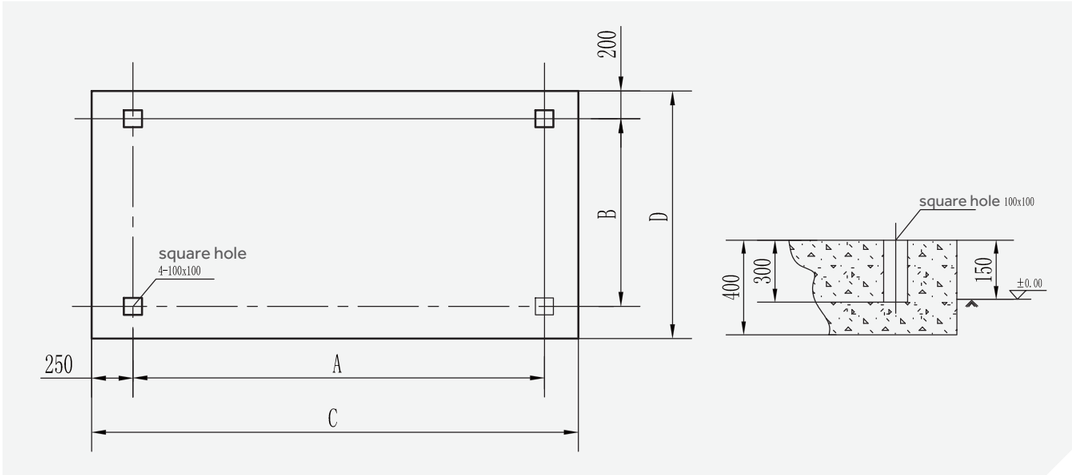

mm

Code / Model	Installation dimension			
	A	B	C	D
CI0350PWNB	2270	900	2770	1300
CI0420PWNB	2270	900	2770	1300
CI0525PWNB	2270	900	2770	1300
CI0645PWNB	2980	900	3480	1300
CI0720PWNB	2980	1160	3480	1560
CI0790PWNB	2980	1160	3480	1560

mm

Code / Model	Installation dimension			
	A	B	C	D
CI0880PWNB	2980	1160	3480	1560
CI1056PWNB	3835	1035	4330	1435
CI1250PWNB	3835	1035	4335	1435
CI1400PWNB	3835	1035	4335	1435
CI1520PWNB	4435	1035	4935	1435
CI1700PWNB	4435	1035	4935	1435
CI2110PWNB	4435	1290	4935	1690

Reserved Space Size

• Single compressor unit

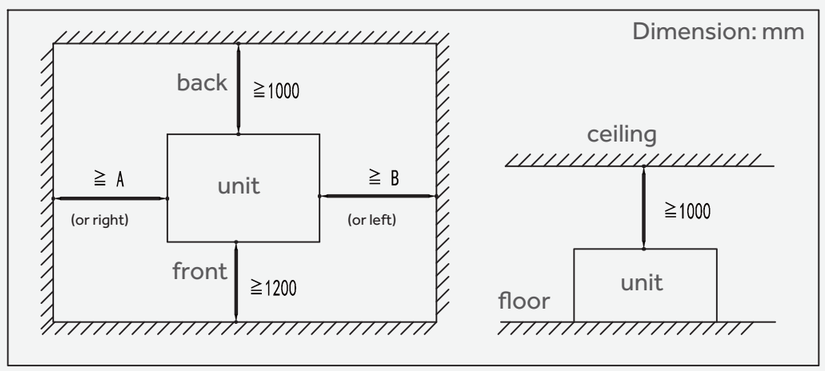

WATER-COOLED SCREW CHILLER

Reserved Space Size

• Double compressor unit

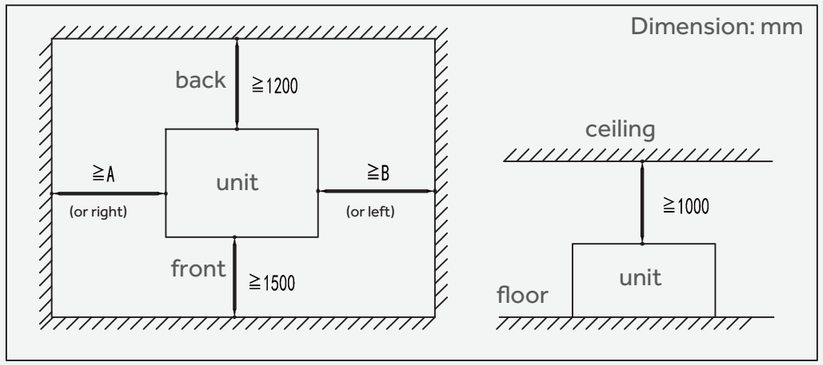

Dimensions / Model	Reserved space size mm	
	A	B
CI0350PWNB	2300	1200
CI0420PWNB	2300	1200
CI0525PWNB	2300	1200
CI0645PWNB	3000	1200
CI0720PWNB	3000	1200
CI0790PWNB	3000	1200

Dimensions / Model	Reserved space size mm	
	A	B
CI0880PWNB	3000	1200
CI1056PWNB	2000	2000
CI1250PWNB	2000	2000
CI1400PWNB	2000	2000
CI1520PWNB	2300	2300
CI1700PWNB	2300	2300
CI2110PWNB	2300	2300

Cooling Capacity and Power Input Table

Chilled water oulet temp.(°C)	Condenser water inlet temperature(°C)											
	26		28		30		32		34		35	
	Cooling capacity	Power input	Cooling capacity	Power input	Cooling capacity	Power input	Cooling capacity	Power input	Cooling capacity	Power input	Cooling capacity	Power input
5	0.97	0.92	0.95	0.95	0.92	0.99	0.90	1.03	0.88	1.07	0.87	1.09
6	1.00	0.92	0.98	0.96	0.96	0.99	0.94	1.03	0.92	1.07	0.91	1.09
7	1.04	0.93	1.02	0.96	1.00	1.00	0.98	1.04	0.96	1.08	0.94	1.10
8	1.08	0.93	1.06	0.97	1.03	1.00	1.01	1.04	0.99	1.08	0.97	1.10
9	1.11	0.94	1.09	0.97	1.07	1.01	1.04	1.05	1.02	1.09	1.00	1.11

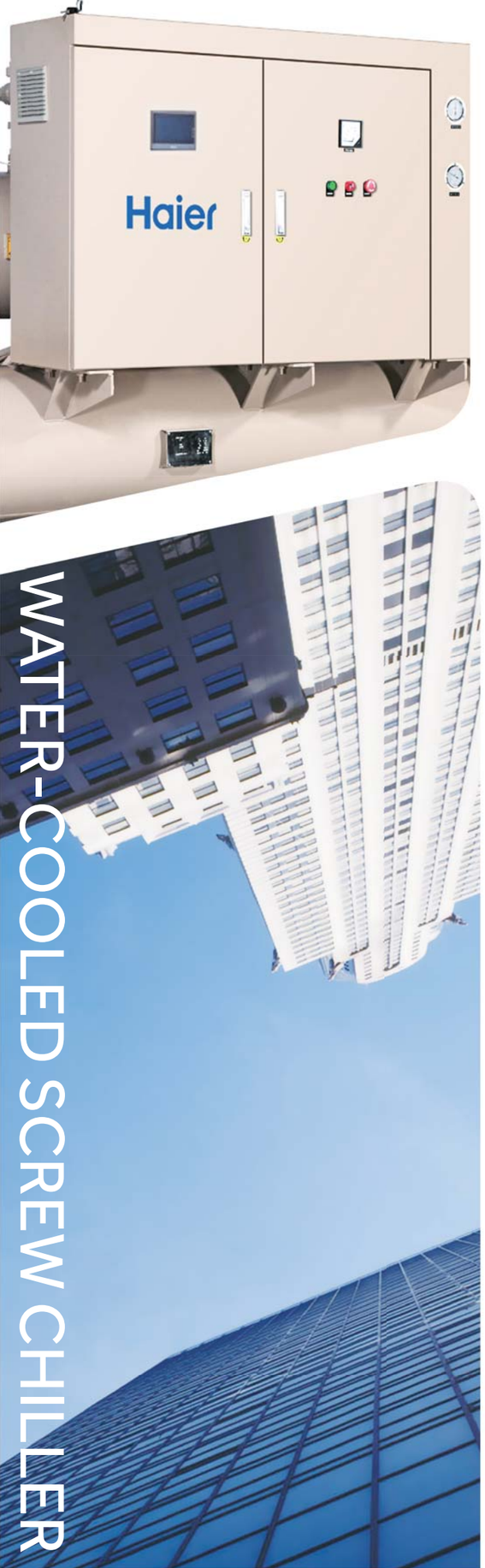

WATER-COOLED SCREW CHILLER R22

High Efficiency

Advanced twin-screw compressor

- Optimum structure design, high efficiency.
- Small inner friction area, low running noise.
- High performance of interior oil segregator, prolong the compressor life.

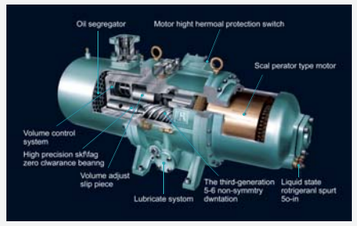

High efficiency, energy- saving

- Unique high efficient heat exchange structure, and optimum copper pipe combination, enhancing the heat exchange efficiency greatly.
- Precise refrigerant volume control technology.

Convenience

MCU control

- Network communication function--it can support multiple electronic communication protocol, not only can realize group control for multiple master units, but also can realize network communication with multiple intelligent equipments.
- Multiple protection function: phase sequence protection, water shortage protection, high/low pressure protection, overload protection, overheat protection, etc. Equipped with high reliability and perfect performance.
- Compressor starts up in sequence and balance the friction with each other.
- Self-diagnostic, self-lock function.
- Fully automatically energy-saving operation.
- Reliable operation, easy installation.

Big LCD display

The unit adopt LCD display,better than the old unit.

Advanced control system and convenient operation

The unit can realize BMS function; meanwhile, remote control function can be combined with interlock function and timer running function, to realize non-person control.

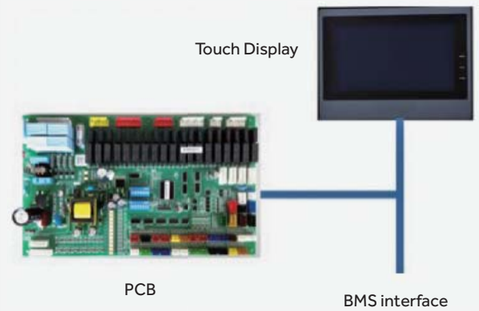

Control functions

- Perform the management function, adjust the balance of operation according to the load status.
- Multiple operation control modes: cooling, self-diagnose, manual changeover.
- Timer ON/OFF control function: self-diagnose and protection functions.
- Multiple password protection (optional).
- Remote control function (optional).
- Query the malfunction records.
- Limit the parameter setting if setting parameter exceeds its safety limitation.
- High/Low pressure protection.
- Compressor overload, winding overheat protection, wrong phase or reverse phase protection, compressor oil level protection.
- Chilled water or cooling water flow super low protection.
- Anti-freeze protection for chilled water outlet temperature.
- Malfunction alarm if temperature sensor or communication is failed.

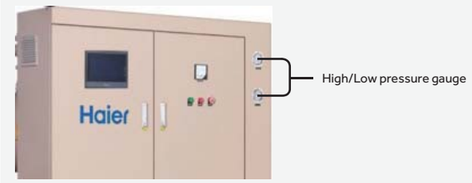

R22 WATER-COOLED SCREW CHILLER

MODEL			CI0127MWNB	CI0162MWNB	CI0198MWNB	CI0232MWNB	CI0267MWNB
Cooling capacity		RT	40	46	56	66	76
		kW	140	162	198	232	267
Power input		kW	31	36	44	51	58
EER			4.52	4.50	4.50	4.55	4.60
Starting current		A	179	268	268	398	398
Max. running current		A	67	84	93	113	123
Safe protection			High/Low pressure protection, compressor overload, winding overheat protection, wrong phase or reverse phase protection; chilled water or cooling water flow super low protection.				
Compressor	Type		Semi-Hermetic screw chiller				
	Quantity		1	1	1	1	1
Power supply		Ph/V/Hz	3/380/50				
Refrigerant throttle type			The thermal expansion valve				
Capacity control			25%-100%				
Controller type			Fully automatic control by programmable controller				
Refrigerant	Type		R22				
	Charge	kg	30	30	30	35	35
Evaporator	Type		Shell & Tube heat exchanger				
	Water inlet/outlet temp	°C	12°C/7°C				
	Inlet/outlet pipe	DN(mm)	65	65	80	80	80
	Rated water flow	m^3/h	24	28	34	40	46
	Water dirt coefficient	$m^2.°C/kW$	0.018				
	Standard pressure	MPa	1.0				
	Water side resistance	KPa	40	40	42	42	45
Condenser	Type		Shell & Tube heat exchanger				
	Water inlet/outlet temp	°C	30°C/35°C				
	Inlet/outlet pipe	DN(mm)	65	65	80	80	80
	Rated water flow	m^3/h	29	34	41	48	55
	Water dirt coefficient	$m^2.°C/kW$	0.044				
	Standard pressure	MPa	1.0				
	Water side resistance	KPa	37	37	39	39	39
External dimension	Unit length	mm	2500	2500	2500	2500	2850
	Unit width	mm	1100	1100	1200	1250	1250
	Unit height	mm	1300	1300	1330	1400	1530
Package dimension	Unit length	mm	2600	2600	2600	2600	2600
	Unit width	mm	1300	1300	1400	1450	1450
	Unit height	mm	1400	1400	1430	1500	1630
Weight	Unit weight	kg	1050	1100	1200	1350	1400
	Gross weight	kg	1100	1150	1250	1400	1450
	Operation weight	kg	1200	1250	1350	1500	1550

Note: Due to our policy of innovation some specifications may be changed without notification.

Nominal cooling				Operating range			
Chilled water		Cooling water		Chilled water		Cooling water	
Inlet water temp. (℃)	Outlet water temp. (℃)	Inlet water temp. (℃)	Outlet water temp. (℃)	Outlet temp. (℃)	Temp. difference between inlet & outlet (℃)	Inlet water temp. (℃)	Temp. difference between inlet & outlet (℃)
12	7	30	35	5-15	2.5-8	23-35	2.5-8

R22 WATER-COOLED SCREW CHILLER

MODEL			CI0336MWNB	CI0387MWNB	CI0443MWNB	CI0583MWNB	CI0633MWNB
Cooling capacity		RT	96	110	126	166	180
		kW	336	387	443	583	633
Power input		kW	74	86	99	117	126
EER			4.54	4.50	4.47	4.98	5.02
Starting current		A	450	598	598	704	768
Max. running current		A	145	174	194	225	257
Safe protection			High/Low pressure protection, compressor overload, winding overheat protection, wrong phase or reverse phase protection; chilled water or cooling water flow super low protection.				
Compressor	Type		Semi-Hermetic screw chiller				
	Quantity		1	1	1	1	1
Power supply		Ph/V/Hz	3/380/50				
Refrigerant throttle type			The thermal expansion valve				
Capacity control			25%-100%				
Controller type			Fully automatic control by programmable controller				
Refrigerant	Type		R22				
	Charge	kg	45	50	55	65	70
Evaporator	Type		Shell & Tube heat exchanger				
	Water inlet/outlet temp	°C	12°C/7°C				
	Inlet/outlet pipe	DN(mm)	80	100	100	125	125
	Rated water flow	m^3/h	57	66	76	100	108
	Water dirt coefficient	$m^2.°C/kW$	0.018				
	Standard pressure	MPa	1.0				
	Water side resistance	KPa	45	46	46	49	49
Condenser	Type		Shell & Tube heat exchanger				
	Water inlet/outlet temp	°C	30°C/35°C				
	Inlet/outlet pipe	DN(mm)	80	100	100	125	125
	Rated water flow	m^3/h	70	80	91	120	130
	Water dirt coefficient	$m^2.°C/kW$	0.044				
	Standard pressure	MPa	1.0				
	Water side resistance	KPa	39	40	40	41	42
External dimension	Unit length	mm	2850	2850	2850	2900	2900
	Unit width	mm	1250	1350	1350	1400	1400
	Unit height	mm	1530	1580	1580	1650	1650
Package dimension	Unit length	mm	2950	2950	2950	3000	3000
	Unit width	mm	1450	1550	1550	1600	1600
	Unit height	mm	1630	1680	1680	1750	1750
Weight	Unit weight	kg	1450	1750	1850	2000	2100
	Gross weight	kg	1500	1800	1900	2050	2150
	Operation weight	kg	1600	1900	2000	2150	2250

Note: Due to our policy of innovation some specifications may be changed without notification.

R22 WATER-COOLED SCREW CHILLER

MODEL			CI0703MWNB	CI0780MWNB	CI0880MWNB	CI1060MWNB
Cooling capacity		RT	200	222	250	301
		kW	703	780	880	1060
Power input		kW	141	156	176	212
EER			4.99	5.00	5.00	5.00
Starting current		A	872	1149	1288	1360
Max. running current		A	286	329	365	379
Safe protection			High/Low pressure protection. compressor overload, winding overheat protection, wrong phase or reverse phase protection; chilled water or cooling water flow super low protection.			
Compressor	Type		Semi-Hermetic screw chiller			
	Quantity		1	1	1	1
Power supply		Ph/V/Hz	3/380/ 50			
Refrigerant throttle type			The thermal expansion valve			
Capacity control			25%-100%			
Controller type			Fully automatic control by programmable controller			
Refrigerant	Type		R22			
	Charge	kg	80	85	95	120
Evaporator	Type		Shell & Tube heat exchanger			
	Water inlet/outlet temp	°C	12°C/7°C			
	Inlet/outlet pipe	DN(mm)	150	150	150	150
	Rated water flow	m^3/h	120	134	151	182
	Water dirt coefficient	$m^2.°C/kW$	0.018			
	Standard pressure	MPa	1.0			
	Water side resistance	KPa	51	51	49	60
Condenser	Type		Shell & Tube heat exchanger			
	Water inlet/outlet temp	°C	30°C/35°C			
	Inlet/outlet pipe	DN(mm)	150	150	150	150
	Rated water flow	m^3/h	145	160	181	218
	Water dirt coefficient	$m^2.°C/kW$	0.044			
	Standard pressure	MPa	1.0			
	Water side resistance	KPa	42	43	40	42
External dimension	Unit length	mm	3000	3100	3100	3400
	Unit width	mm	1500	1600	1600	1700
	Unit height	mm	1700	1750	1750	1750
Package dimension	Unit length	mm	3100	3200	3200	3500
	Unit width	mm	1700	1800	1800	1900
	Unit height	mm	1800	1850	1850	1850
Weight	Unit weight	kg	2300	2700	2850	3100
	Gross weight	kg	2350	2750	2900	3150
	Operation weight	kg	2450	2850	3000	3250

Note: Due to our policy of innovation some specifications may be changed without notification.

R22 WATER-COOLED SCREW CHILLER

MODEL			CI1236MWNB	CI1398MWNB
Cooling capacity		RT	351	397
		kW	1236	1398
Power input		kW	247	280
EER			5.00	4.99
Starting current		A	1025	1048
Max. running current		A	514	554
Safe protection			High/Low pressure protection. compressor overload, winding overheat protection, wrong phase or reverse phase protection; chilled water or cooling water flow super low protection.	
Compressor	Type		Semi-Hermetic screw chiller	
	Quantity		2	2
Power supply		Ph/V/Hz	3/380/50	
Refrigerant throttle type			The thermal expansion valve	
Capacity control			12.5%-100%	
Controller type			Fully automatic control by programmable controller	
Refrigerant	Type		R22	
	Charge	kg	70*2	80*2
Evaporator	Type		Shell & Tube heat exchanger	
	Water inlet/outlet temp	°C	12°C/7°C	
	Inlet/outlet pipe	DN(mm)	150	200
	Rated water flow	m^3/h	212	240
	Water dirt coefficient	$m^2.°C/kW$	0.018	
	Standard pressure	MPa	1.0	
	Water side resistance	KPa	61	65
Condenser	Type		Shell & Tube heat exchanger	
	Water inlet/outlet temp	°C	30°C/35°C	
	Inlet/outlet pipe	DN(mm)	150	200
	Rated water flow	m^3/h	254	288
	Water dirt coefficient	$m^2.°C/kW$	0.044	
	Standard pressure	MPa	1.0	
	Water side resistance	KPa	42	44
External dimension	Unit length	mm	4500	4500
	Unit width	mm	1550	1550
	Unit height	mm	1800	1850
Package dimension	Unit length	mm	4600	4600
	Unit width	mm	1750	1750
	Unit height	mm	1900	1950
Weight	Unit weight	kg	4150	4400
	Gross weight	kg	4200	4450
	Operation weight	kg	4450	4700

Note: Due to our policy of innovation some specifications may be changed without notification.

R22 WATER-COOLED SCREW CHILLER

MODEL			CI1480MWNB	CI1580MWNB	CI1759MWNB
Cooling capacity		RT	421	449	500
		kW	1480	1580	1759
Power input		kW	296	315	350
EER			5.00	5.02	5.03
Starting current		A	1158	1478	1653
Max. running current		A	572	658	730
Safe protection			High/Low pressure protection. compressor overload, winding overheat protection, wrong phase or reverse phase protection; chilled water or cooling water flow super low protection.		
Compressor	Type		Semi-Hermetic screw chiller		
	Quantity		2	2	2
Power supply		Ph/V/Hz	3/380/ 50		
Refrigerant throttle type			The thermal expansion valve		
Capacity control			12.5%-100%		
Controller type			Fully automatic control by programmable controller		
Refrigerant	Type		R22		
	Charge	kg	85*2	90*2	95*2
Evaporator	Type		Shell & Tube heat exchanger		
	Water inlet/outlet temp	°C	12°C/7°C		
	Inlet/outlet pipe	DN(mm)	200	200	200
	Rated water flow	m^3/h	254	271	302
	Water dirt coefficient	$m^2.°C/kW$	0.018		
	Standard pressure	MPa	1.0		
	Water side resistance	KPa	68	70	74
Condenser	Type		Shell & Tube heat exchanger		
	Water inlet/outlet temp	°C	30°C/35°C		
	Inlet/outlet pipe	DN(mm)	200	200	200
	Rated water flow	m^3/h	304	325	363
	Water dirt coefficient	$m^2.°C/kW$	0.044		
	Standard pressure	MPa	1.0		
	Water side resistance	KPa	45	45	45
External dimension	Unit length	mm	4500	4500	4800
	Unit width	mm	1550	1550	1700
	Unit height	mm	1850	1850	1950
Package dimension	Unit length	mm	4600	4600	4900
	Unit width	mm	1750	1750	1900
	Unit height	mm	1950	1950	2050
Weight	Unit weight	kg	4550	5000	5450
	Gross weight	kg	4600	5050	5500
	Operation weight	kg	4850	5300	5750

Note: Due to our policy of innovation some specifications may be changed without notification.

WATER-COOLED SCREW CHILLER

Unit Dimension Diagram

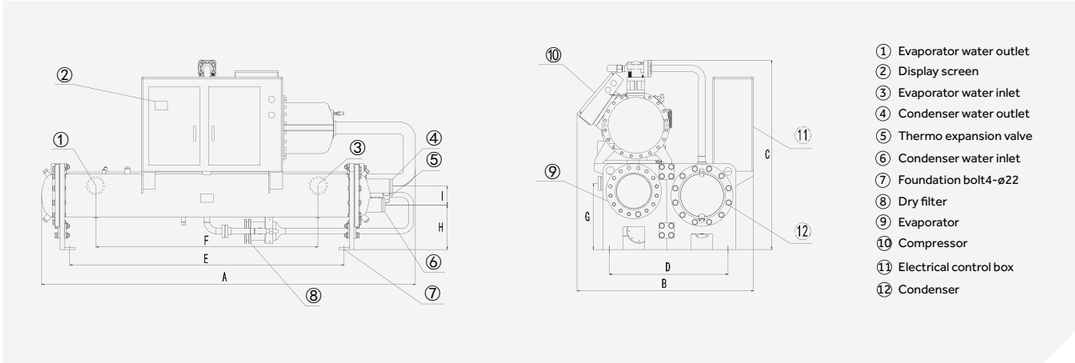

Unit: mm

Model \ dimension	A	B	C	D	E	F	G	H	I
CI0127MWNB	2500	1100	1300	745	1730	1570	420	285	120
CI0162MWNB	2500	1100	1300	745	1730	1570	420	285	120
CI0198MWNB	2500	1200	1330	745	1730	1570	420	285	120
CI0232MWNB	2500	1250	1400	745	1730	1570	420	285	120
CI0267MWNB	2500	1250	1530	745	1730	1570	420	285	120
CI0336MWNB	2850	1250	1530	745	2030	1835	420	285	120
CI0387MWNB	2850	1350	1580	745	2030	1835	440	305	140
CI0443MWNB	2850	1350	1580	745	2030	1835	440	305	140
CI0583MWNB	2900	1400	1650	745	2030	1835	490	305	180
CI0633MWNB	2900	1400	1650	745	2030	1835	490	305	180
CI0703MWNB	3000	1500	1700	900	2030	1835	490	350	200
CI0780MWNB	3100	1600	1750	900	2030	1835	490	350	200
CI0880MWNB	3100	1600	1750	900	2030	1835	520	350	200
CI1060MWNB	3400	1700	1750	1035	2325	2130	520	350	200

WATER-COOLED SCREW CHILLER

Unit Dimension Diagram

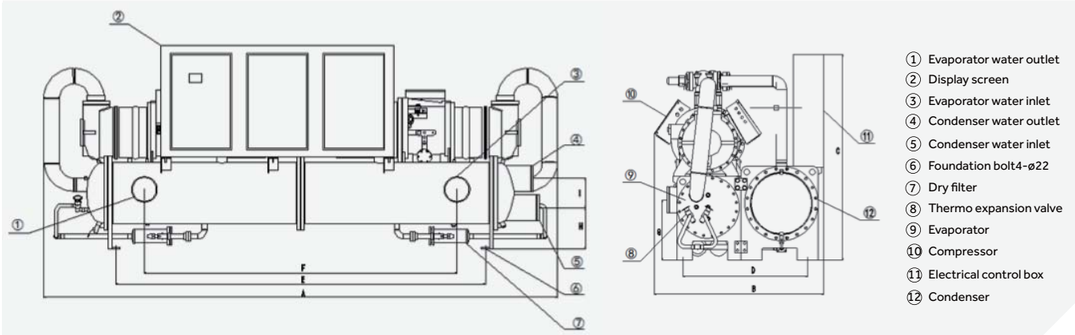

Unit: mm

Model \ Dimension	A	B	C	D	E	F	G	H	I
CI1236MWNB	4500	1550	1800	1035	3125	2910	500	335	220
CI1398MWNB	4500	1550	1850	1035	3125	2850	510	335	250
CI1480MWNB	4500	1550	1850	1035	3125	2850	510	335	250
CI1580MWNB	4500	1550	1850	1035	3125	2850	510	335	250
CI1759MWNB	4800	1700	1950	1160	3125	2850	620	370	270

The Unit Installation Foundation Drawing

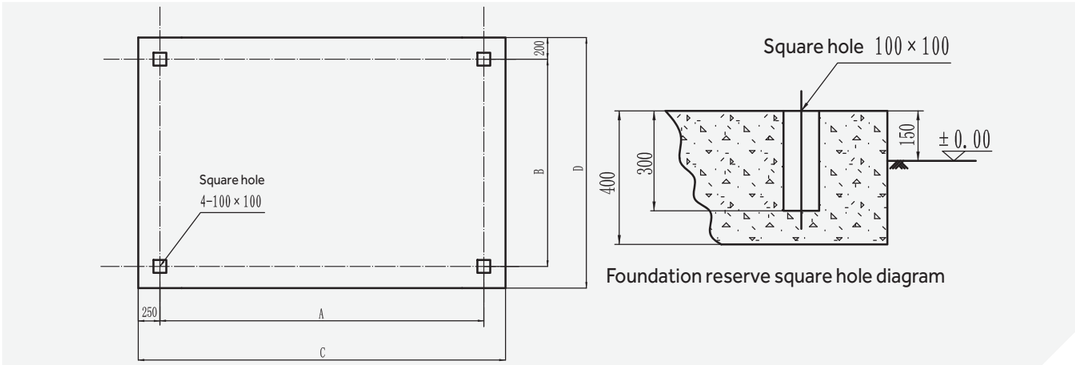

Model \ Dimension	Dimensions mm			
	A	B	C	D
CI0127MWNB	1730	745	2230	1145
CI0162MWNB	1730	745	2230	1145
CI0198MWNB	1730	745	2230	1145
CI0232MWNB	1730	745	2230	1145
CI0267MWNB	1730	745	2230	1145
CI0336MWNB	2030	745	2530	1145
CI0387MWNB	2030	745	2530	1145
CI0443MWNB	2030	745	2530	1145
CI0583MWNB	2030	745	2530	1145
CI0633MWNB	2030	745	2530	1145

Model \ Dimension	Dimensions mm			
	A	B	C	D
CI0703MWNB	2030	900	2530	1300
CI0780MWNB	2030	900	2530	1300
CI0880MWNB	2030	900	2530	1300
CI1060MWNB	2325	1035	2825	1435
CI1236MWNB	3125	1035	3625	1435
CI1398MWNB	3125	1035	3625	1435
CI1480MWNB	3125	1035	3625	1435
CI1580MWNB	3125	1035	3625	1435
CI1759MWNB	3125	1160	3625	1560

The Unit Installation Space Drawing

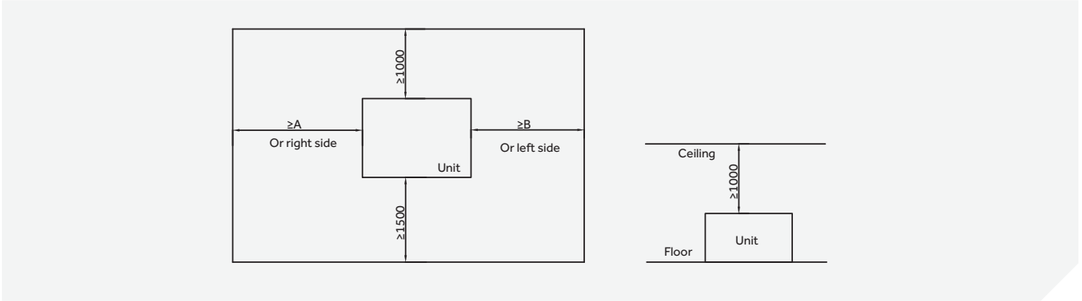

Model \ Dimension	A(mm)	B(mm)
CI0127MWNB	2000	1500
CI0162MWNB	2000	1500
CI0198MWNB	2000	1500
CI0232MWNB	2000	1500
CI0267MWNB	2000	1500
CI0336MWNB	2200	1500
CI0387MWNB	2200	1500
CI0443MWNB	2200	1500
CI0583MWNB	2200	1500
CI0633MWNB	2200	1500

Model \ Dimension	A(mm)	B(mm)
CI0703MWNB	2200	1500
CI0780MWNB	2200	1500
CI0880MWNB	2200	1500
CI1060MWNB	2500	1500
CI1236MWNB	3300	1500
CI1398MWNB	3300	1500
CI1480MWNB	3300	1500
CI1580MWNB	3300	1500
CI1759MWNB	3300	1500

Cooling Capacity and Power Input Table

Chilled water oulet temp.(°C)	Condenser water inlet temperature(°C)											
	26		28		30		32		34		35	
	Cooling capacity	Power input	Cooling capacity	Power input	Cooling capacity	Power input	Cooling capacity	Power input	Cooling capacity	Power input	Cooling capacity	Power input
5	0.97	0.92	0.95	0.95	0.92	0.99	0.90	1.03	0.88	1.07	0.87	1.09
6	1.00	0.92	0.98	0.96	0.96	0.99	0.94	1.03	0.92	1.07	0.91	1.09
7	1.04	0.93	1.02	0.96	1.00	1.00	0.98	1.04	0.96	1.08	0.94	1.10
8	1.08	0.93	1.06	0.97	1.03	1.00	1.01	1.04	0.99	1.08	0.97	1.10
9	1.11	0.94	1.09	0.97	1.07	1.01	1.04	1.05	1.02	1.09	1.00	1.11

The Unit Capacity Control

Continuous adjust capacity output, can realize accurate control temperature of water

Compressor quantity	Capacity control range
Single compressor unit	25%–100%
Twin-compressor unit	12.5%–100%

WATER-COOLED SCREW CHILLER

The Unit Water System Diagram

•Chilled water pipe diagram

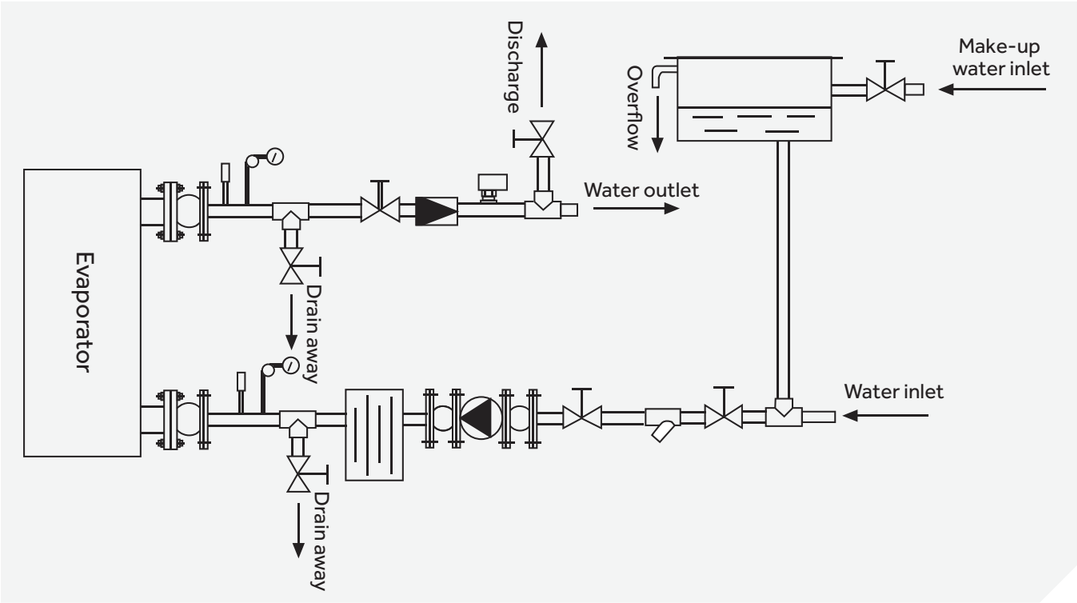

•Cooling water pipe diagram

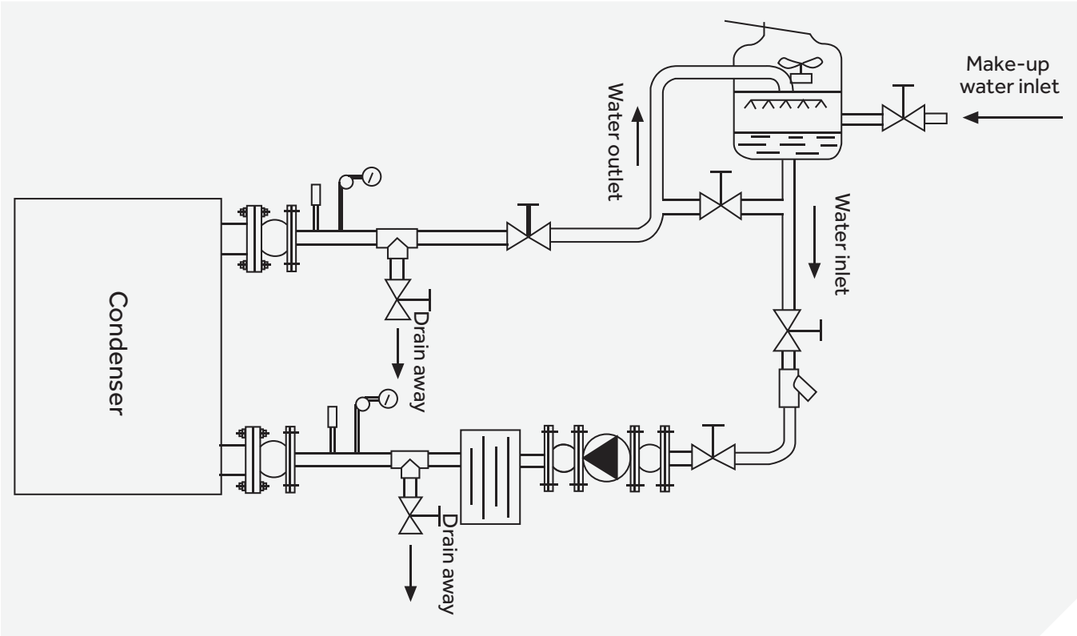

Pipe Accessory

No	Symbol	Name	Suggest install location	No	Symbol	Name	Suggest install location
1		Shockproof soft pick up	Unit joint and pump before and back of the water pump	7		Three Direct Links	Everywhere in drawing
2		Thermometer (0-50°C)	Water inlet and outlet pipe	8		Expansion tank	The top 1 ~ 1.5 meters above the system
3		Pressure gage (0.1-1.0MPa)	Water inlet and outlet pipe	9		Target type flow controller	Arrow direction same as water flow direction, horizontal part of water outlet ,with the distance of more than 5 times of pipe diameter
4		Stop valve	Everywhere in drawing, when used for exhaust, installed in the water outlet pipe, and in between the top and expansion tank system	10		One-way valve	In chilled water outlet pipe
5		Electronic descaling instrument	In chilled water inlet pipe and back of the water pump	11		Water pump	In water inlet pipe
6		Water filter	In water inlet pipe and in front of the pump	12		Cooling tower	

Water-cooled Screw Chiller Operation Conditions

Chilled water		Cooling water		Ambient temperature	Storage temperature	Water flow range
Water outlet temperature	Water inlet temperature	Water outlet temperature	Water outlet temperature			
4~15°C	3.8~7°C	23~35°C	3.8~7°C	0~40°C	-40~55°C	Rated water flow±30%

Water-cooled Screw Chiller Factory Standard Configuration Table

No	Name	Quantity
1	Semi-hermetic twin-screw compressor	1 or 2
2	Evaporator	1
3	Condenser	1
4	Electric control box	1
5	Refrigerant	See the nameplate
6	Between the compressor and electric control cabinet wiring	1
7	Chiller manual	1
8	Electronic control manual	1
9	Pipe connection with clamp	4
10	Paddle flow switch	2

MODULAR CHILLER

MODULAR CHILLER
AIR-COOLED SERIES (R410a)

Structure

New appearance

New Y-shape design , more fashion

High Efficiency

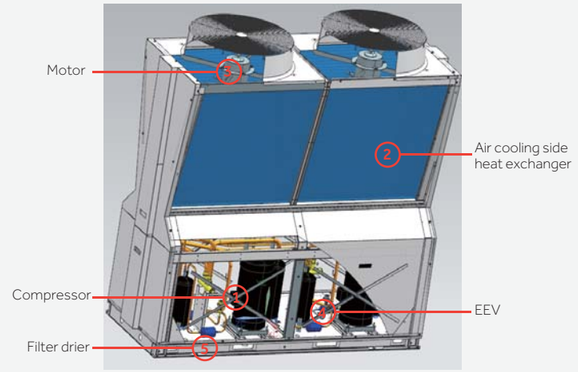

1 Compressor

Best scroll compressor, low sound power level, high EER.

2 Air cooling side heat exchanger

Haier modular chiller enlarge the heat exchanging area with 5%, bigger than normal modular chiller, increase EER.

3 Motor

Low sound power level axial fan, together with the high efficient motor, making higher efficiency and lower sound power level .

High efficient parts and unique design ensure the chiller high efficiency EER up to 3.39(R410a Series).

Easy Installation

Compact design, reduce footprint

New Y-shape design, small floor area, only 1.56m², 28% footprint can be reduced.

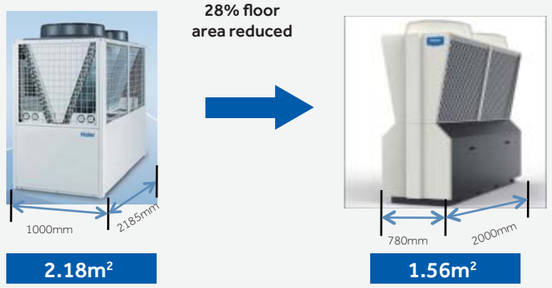

MODULAR CHILLER

Easy Installation

Standard flow switch

Standard flow switch in the product, installer no need to purchase flow switch.

Wide Application

Wide temperature operation range

-15°C in heating, 50°C in cooling.

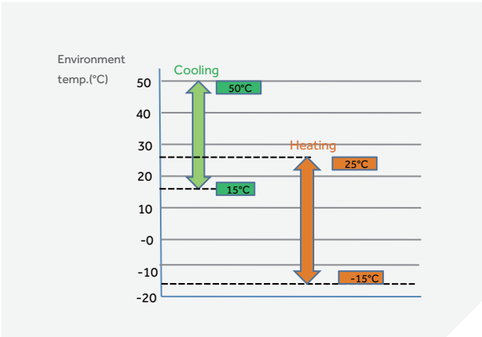

Heating water outlet temp up to 55°C

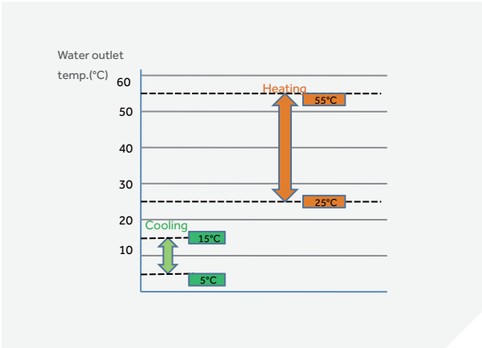

High Reliability

Backup operation function

The system has three modules, the actual operation of just two module, if one module malfunction another module will start automatically according to the water temperature.

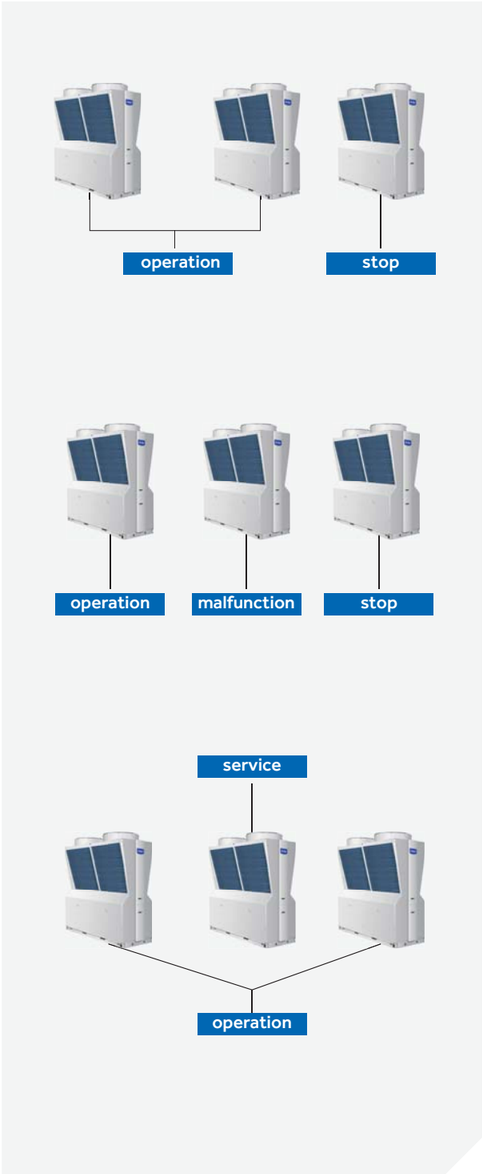

Shell & tube heat exchanger

The new modular chiller adopt Shell & Tube heat exchanger avoid dirty plugging , higher efficiency and reliability

Filter drier

Filter drier,absorb moisture in the system, avoid the emergence of the "ice block"

Pressure sensor control

Through the pressure sensor real-time monitoring, realize the system quickly, accurately control, ensure the unit efficient and stable operation

Three phase fan motor

Three phase fan motor,compared with one phase fan motor low starting current, high speed and more stable.

Safety and protection

Phase reverse protection, high and low pressure protection, freeze protection, overheat protection, overload protection, etc.

Comfort

Accurately control water temperature

EEV adopts PID control, accurate control refrigerant distribution, outlet water temp. ±5% of the set temperature .

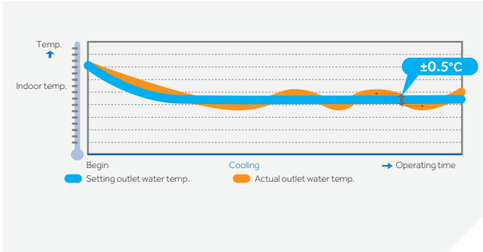

MODULAR CHILLER

Water System Installation Sketch

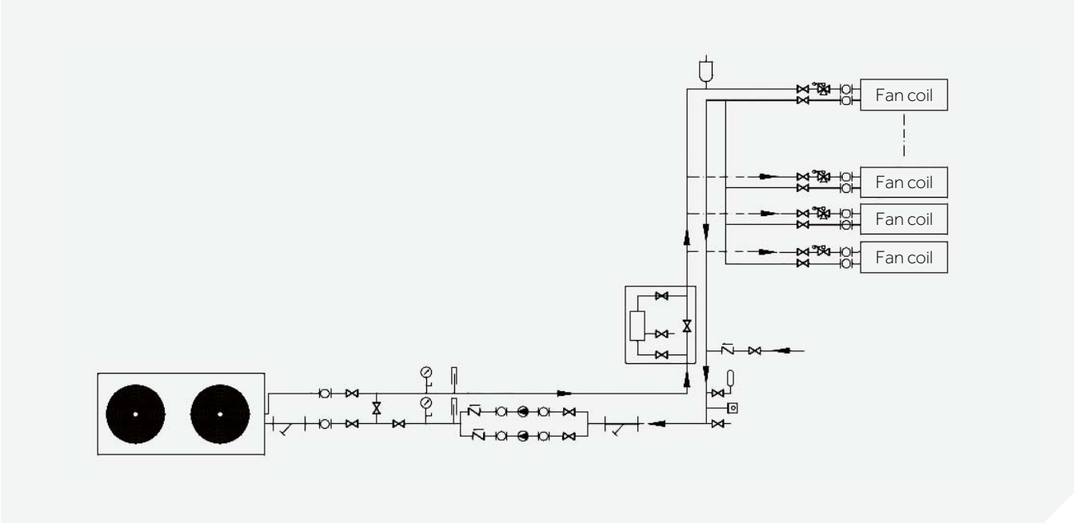

Model	Description	Model	Description
	Check valve		Water pump
	Automatic exhaust valve		flexible connection
	Water filter		Expansion tank
	Stop valve		Electronic water processor
	Thermometer		3-way valve
	Pressure gauge		2-way valve

R410a AIR-COOLED MODULAR CHILLER 50Hz

CA0035EAND

CA0070EAND

CA0100EAND/CA0130EAND

Model			CA0035EAND	CA0070EAND	CA0100EAND*	CA0130EAND
Cooling	Cooling capacity	kW	30	65	100	130
	Power input	kW	9.4	19.2	29.5	38.4
	Running current	A	15.8	32.4	57.5	64.7
Heating	Heating capacity	kW	33	70	103	135
	Power input	kW	9.6	19.1	29.6	38.2
	Running current	A	16.2	*32.2	58	*64.3
Max.Power input		kW	16.3	28	42	56
Max. running current		A	27.5	55	82	110
Power supply			3N/380V/50Hz			
Refrigerant throttle type			Electronic expansion valve			
Capacity control			100%	50%,100%	33%，66%，100%	25%,50%,75%,100%
Safety & functional protections			High/low Pressure Protection,Water Lackage delay Protection, Freeze Protection,Overload & Overheat Protection, Phase Loss, Phase Sequence Protection			
Compressor	Type		scroll compressor			
	Quantity		1	2	3	4
	Input power	KW	9	18	27	36
Refrigerant	Type		R410A			
	Charge	kg	5.5	6*2	6*3	5.8*4
Air side heat exchanger	Type		Inner grooved copper pipe & hydrophilic aluminum fin coil			
	Fan power	KW	0.7	0.75*2	0.75*3	0.75*4
	Fan type		Axial flow fan			
	Fan quantity		1	2	3	4
Water side heat exchanger	Type		Plate heat exchanger	Shell & Tube heat exchanger		
	Rated water flow	m^3/h	5.6	12	17.7	24
	Inlet/outlet pipe		DN65(Flange)	R 2" (external screw thread)	R 2 1/2" (external screw thread)	R 2 1/2" (external screw thread)
	Water dirt coefficient	$m^2°C/kW$	0.018			
	Standard pressure	Mpa	1.0	1.0	1.0	1.0
	Water resistance	kPa	40	45	50	60
External dimension	Unit length	mm	918	2060	2060	2060
	Unit width	mm	1038	780	1603	1603
	Unit height	mm	1710	2170	2170	2170
Package dimension	Unit length	mm	1070	2240	2240	2240
	Unit width	mm	960	830	1650	1650
	Unit height	mm	1850	2310	2310	2310
Weight	Unit weight	kg	270	*630	*800	1090
	Gross weight	kg	290	*645	*850	1125
	Operation weight	kg	300	*670	*870	1200

*Data is pending

MODULAR CHILLER

Unit Dimension Diagram

•R410a Y-shape air-cooled modular chiller dimension

CA0035EAND Model

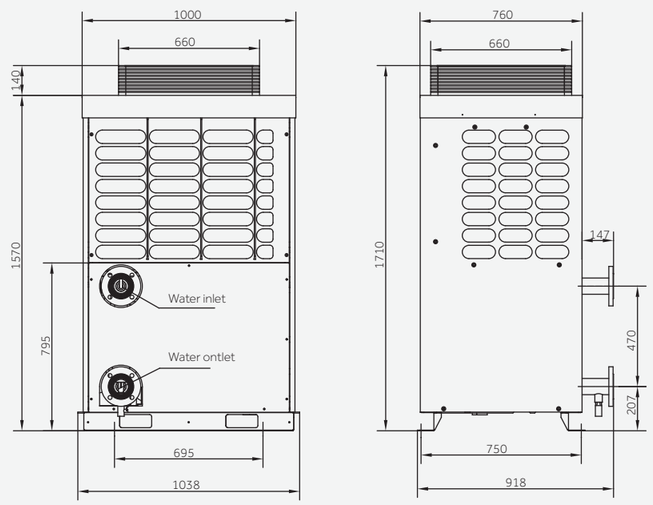

CA0070EAND Model

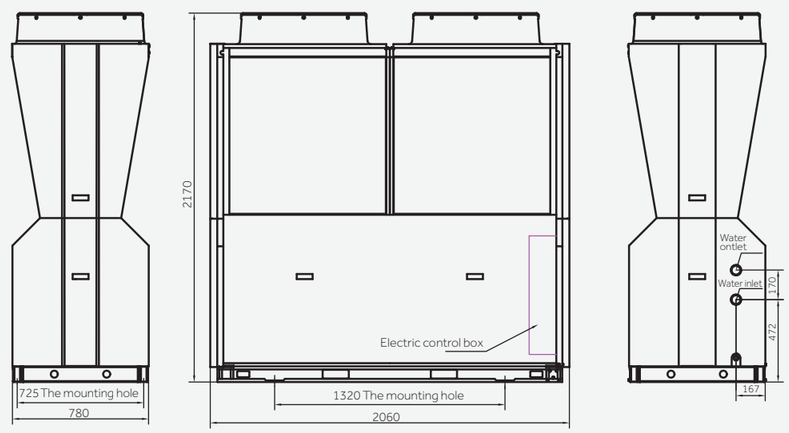

Unit Dimension Diagram

•R410a Y-shape air-cooled modular chiller dimension

CA0100EAND/CA0130EAND Model

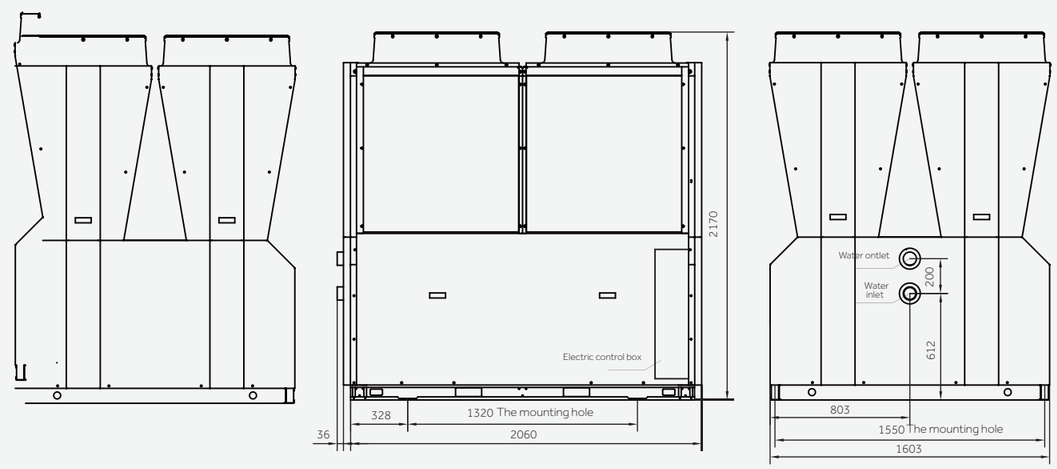

The Unit Installation & Maintenance Space

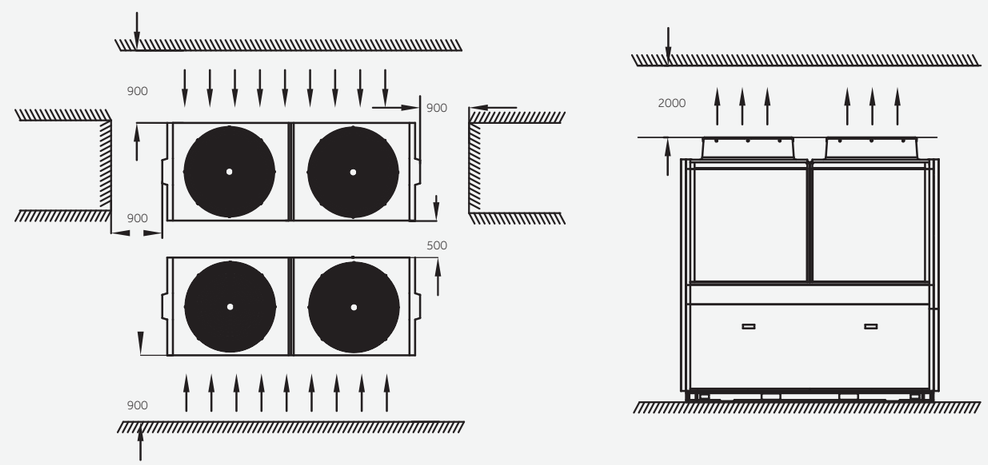

MODULAR CHILLER

Performance Table

R410a:CA0035EAND

•Cooling capacity table

Water oulet temp.(°C)	Ambient temperature				
	25	30	35	40	45
5	1.03	0.97	0.94	0.90	0.85
7	1.07	1.03	1.00	0.95	0.88
9	1.10	1.06	1.03	0.98	0.91
11	1.12	1.10	1.08	1.02	0.97
13	1.19	1.20	1.15	1.10	1.05
15	1.31	1.31	1.26	1.20	1.15

•Heating capacity table

Water oulet temp.(°C)	Ambient temperature							
	15	10	7	5	0	-5	-10	-15
30	1.23	1.15	1.11	1.06	0.87	0.80	0.71	0.6208
35	1.13	1.10	1.08	0.83	0.74	0.68	0.58	0.57
40	1.13	1.09	1.05	0.83	0.74	0.66	0.57	0.55
45	1.13	1.09	1.00	0.83	0.74	0.64	0.57	0.53
50	1.13	1.07	0.92	0.81	0.74	0.64	0.56	0.51
55	1.12	1.06	0.92	0.81	0.72	0.62	-	-

R410a:CA0070EAND/CA0100EAND/CA0130EAND

•Cooling capacity table

Water oulet temp.(°C)	Ambient temperature				
	25	30	35	40	45
5	1.07	1.00	0.94	0.94	0.81
7	1.14	1.07	1.00	0.96	0.86
9	1.20	1.13	1.06	0.98	0.91
11	1.27	1.19	1.12	1.04	0.96
13	1.34	1.26	1.17	1.09	1.01
15	1.41	1.32	1.23	1.14	1.06

•Heating capacity table

Water oulet temp.(°C)	Ambient temperature							
	15	10	7	5	0	-5	-10	-15
30	1.26	1.16	1.12	1.07	0.88	0.82	0.72	0.69
35	1.24	1.15	1.11	1.06	0.88	0.81	0.71	0.69
40	1.22	1.14	1.10	1.05	0.87	0.80	0.71	0.67
45	1.19	1.12	1.00	0.98	0.85	0.79	0.70	0.66
50	1.19	1.11	0.98	0.97	0.84	0.78	0.67	0.65
55	1.14	1.07	0.97	0.94	0.83	0.77	-	-

Chiller Water System And Control Wiring Diagram

Water pipe and control wiring connection diagram for multi-modular chiller

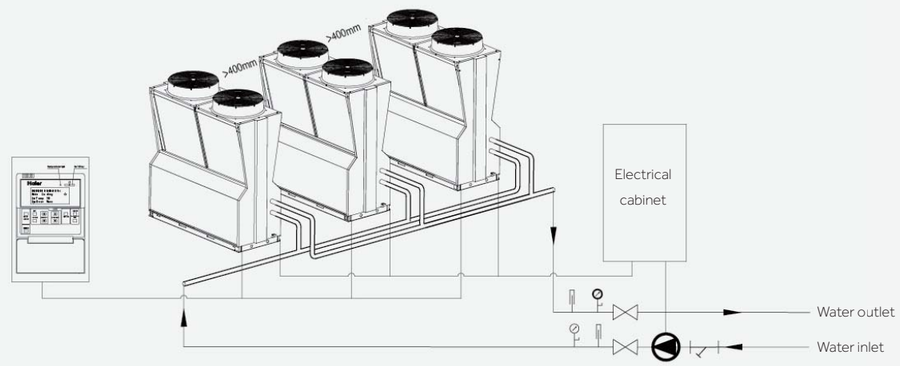

Control Wiring Diagram

For example the model CA0070AAND

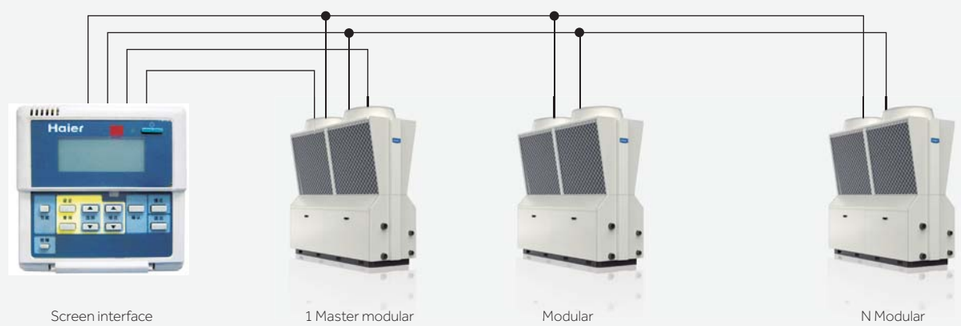

N≦16

FAN COIL

CEILING CONCEALED FAN COIL

Flexible Design

12/30/50 Pa ESP

Duct fan coil takes new steel fan design ,enlarge the fan length and diameter , use new powerful motor , the ESP have 12/30/50 Pa choice, give the flexibility in design work .

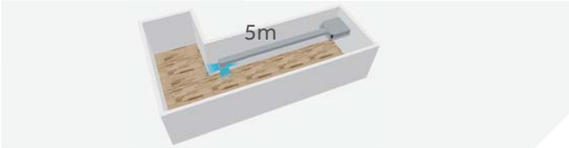

Return air choice

Friendly design of rear air return or bottom air return is available.

High Reliability

Steel fan and fan scroll

The fan and fan scroll takes steel material design, in case of fire , it will avoid the fire.

Three way valve choice

According to customer need , Haier can supply the three way valve to match with cassette and duct fan coil , give the flexibility in design work .

Tailor made product

According to customer need,Haier can supply 50Pa as standard product,also 12Pa,30pa as optional,also Haier can supply return air box, return air box & filter,enlarged drain pan as option;

CEILING CONCEALED TYPE (STANDARD TYPE)

AHRI CERTIFIED® www.ahridirectory.org

MODEL							
	No return air box		FCE-034CCN2B	FCE-051CCN2B	FCE-068CCN2B	FCE-085CCN2B	FCE-102CCN2B
	Rear air inlet box&filter		FCE-034CCB2B	FCE-051CCB2B	FCE-068CCB2B	FCE-085CCB2B	FCE-102CCB2B
	Bottom air inlet box&filter		FCE-034CCD2B	FCE-051CCD2B	FCE-068CCD2B	FCE-085CCD2B	FCE-102CCD2B
Air volume	m³/h	H	340	510	680	850	1020
		M	258	388	517	646	775
		L	177	265	354	442	530
ESP	pa		50				
Cooling capacity	W	H	2410	3550	4550	5510	6200
		M	2169	3195	4095	4959	5580
		L	1783	2627	3367	4077	4588
Heating capacity	W	H	3700	5600	7450	8800	10200
		M	3219	4872	6482	7656	8874
		L	2701	4088	5439	6424	7446
Power input	W	H	49	66	84	100	118
Power supply	phase/Voltage/Hz		1/220/50				
Noise level	dB(A)	H	42	44	46	47	49
Water flow	l/min		6.9	10.2	13.0	15.8	17.8
Water pressure drop	KPa		30	30	30	30	40
Water inlet/outlet connection pipe			3/4" internal thread				
Condensate water connection pipe			3/4" external thread				
Net weight (no air return box)	kg		11.6	14.1	15.8	17.5	18.4
Gross weight (no air return box)	kg		13.9	16.6	18.5	20.4	21.6
Net weight (with air return box)	kg		14.2	17.2	19.2	21.2	22.5
Gross weight (with air return box)	kg		16.4	19.4	21.6	23.8	25.5
Net dimension (L*W*H) (no air return box)	mm		693*470*225	823*470*225	928*470*225	1013*470*225	1143*470*225
Shipping dimension (L*W*H) (no air return box)	mm		740*542*248	870*542*248	975*542*248	1060*542*248	1190*542*248
Net dimension (L*W*H) (with air return box)	mm		693*511*225	823*511*225	928*511*225	1013*511*225	1143*511*225
Shipping dimension (L*W*H) (with air return box)	mm		740*542*248	870*542*248	975*542*248	1060*542*248	1190*542*248
Net dimension (L*W*H) (with air return box)	mm		693*492*246	823*492*246	928*492*246	1013*492*246	1143*492*246
Shipping dimension (L*W*H) (with air return box)	mm		740*522*263	870*522*263	975*522*263	1060*522*263	1190*522*263
Controller (optional)	Wired		HW-CA101AGK	HW-CA101AGK	HW-CA101AGK	HW-CA101AGK	HW-CA101AGK
Three way valve (optional)			3VFCE	3VFCE	3VFCE	3VFCE	3VFCE

Option:
1 Three way valve as the accessory;
2 enlarged drain pan ;

Note:
1 The tested external static pressure have no air return box &filter;
2 Above airflow&cooling capacity&heating capacity are based on the models with no air return box & filter; 97% airflow&97% cooling capacity &97% heating capacity are based on the models with air return box & filter;
3 The water inlet direction can be changed based on the actual situation , but the cooling capacity&heating capacity with reduce 15% when changing the water inlet direction ;

CEILING CONCEALED TYPE (STANDARD TYPE)

AHRI CERTIFIED® www.ahridirectory.org

MODEL		No return air box	FCE-136CCN2B	FCE-170CCN2B	FCE-204CCN2B	FCE-238CCN2B
		Rear air inlet box&filter	FCE-136CCB2B	FCE-170CCB2B	FCE-204CCB2B	FCE-238CCB2B
		Bottom air inlet box&filter	FCE-136CCD2B	FCE-170CCD2B	FCE-204CCD2B	FCE-238CCD2B
Air volume	m³/h	H	1360	1700	2040	2380
		M	1034	1292	1550	1809
		L	707	884	1061	1238
	pa		50			
Cooling capacity	W	H	8600	10800	12000	13200
		M	7740	9720	10800	11880
		L	6364	7992	8880	9768
Heating capacity	W	H	13800	17500	21000	22500
		M	12006	15225	18270	19575
		L	10074	12775	15330	16425
Power input	W	H	174	210	250	300
Power supply	phase/Voltage/Hz		1/220/50			
Noise level	dB(A)	H	50	52	54	55
Water flow	l/min		24.7	31.0	34.4	37.8
Water pressure drop	KPa		40	40	40	50
Water inlet/outlet connection pipe			3/4" internal thread			
Condensate water connection pipe			3/4" external thread			
Net weight (no air return box)	kg		26.2	29.1	32.8	35.1
Gross weight (no air return box)	kg		30.1	33.4	38.1	40.4
Net weight (with air return box)	kg		31.4	34.8	39.2	42.2
Gross weight (with air return box)	kg		34.7	38.5	44.0	46.9
Net dimension (L*W*H) (no air return box)	mm		1443*470*225	1593*470*225	1813*470*225	2013*470*225
Shipping dimension (L*W*H) (no air return box)	mm		1490*542*248	1640*542*248	1860*542*248	2060*542*248
Net dimension (L*W*H) (with air return box)	mm		1443*511*225	1593*511*225	1813*511*225	2013*511*225
Shipping dimension (L*W*H) (with air return box)	mm		1490*542*248	1640*542*248	1860*542*248	2060*542*248
Net dimension (L*W*H) (with air return box)	mm		1443*492*246	1593*492*246	1813*492*246	2013*492*246
Shipping dimension (L*W*H) (with air return box)	mm		1490*522*263	1640*522*263	1860*522*263	2060*522*263
Controller (optional)	Wired		HW-CA101AGK	HW-CA101AGK	HW-CA101AGK	HW-CA101AGK
Three way valve (optional)			3VFCE	3VFCE	3VFCE	3VFCE

Option:
1 Three way valve as the accessory;
2 enlarged drain pan ;

Note:
1 The tested external static pressure have no air return box &filter;
2 Above airflow&cooling capacity&heating capacity are based on the models with no air return box & filter; 97% airflow&97% cooling capacity &97% heating capacity are based on the models with air return box & filter;
3 The water inlet direction can be changed based on the actual situation , but the cooling capacity&heating capacity with reduce 15% when changing the water inlet direction ;

CEILING CONCEALED TYPE (STANDARD TYPE)

AHRI CERTIFIED® www.ahridirectory.org

MODEL		No return air box	FCE-034BCN2B	FCE-051BCN2B	FCE-068BCN2B	FCE-085BCN2B	FCE-102BCN2B
		Rear air inlet box&filter	FCE-034BCB2B	FCE-051BCB2B	FCE-068BCB2B	FCE-085BCB2B	FCE-102BCB2B
		Bottom air inlet box&filter	FCE-034BCD2B	FCE-051BCD2B	FCE-068BCD2B	FCE-085BCD2B	FCE-102BCD2B
Air volume	m³/h	H	340	510	680	850	1020
		M	258	388	517	646	775
		L	177	265	354	442	530
ESP	pa		30				
Cooling capacity	W	H	2410	3550	4550	5510	6200
		M	2169	3195	4095	4959	5580
		L	1783	2627	3367	4077	4588
Heating capacity	W	H	3700	5600	7450	8800	10200
		M	3219	4872	6482	7656	8874
		L	2701	4088	5439	6424	7446
Power input	W	H	44	59	72	87	108
Power supply	phase/Voltage/Hz		1/220/50				
Noise level	dB(A)	H	39	42	43	45	47
Water flow	l/min		6.9	10.2	13.0	15.8	17.8
Water pressure drop	KPa		30	30	30	30	40
Water inlet/outlet connection pipe			3/4" internal thread				
Condensate water connection pipe			3/4" external thread				
Net weight (no air return box)	kg		11.6	14.1	15.8	17.5	18.4
Gross weight (no air return box)	kg		13.9	16.6	18.5	20.4	21.6
Net weight (with air return box)	kg		14.2	17.2	19.2	21.2	22.5
Gross weight (with air return box)	kg		16.4	19.4	21.6	23.8	25.5
Net dimension (L*W*H) (no air return box)	mm		693*470*225	823*470*225	928*470*225	1013*470*225	1143*470*225
Shipping dimension (L*W*H) (no air return box)	mm		740*542*248	870*542*248	975*542*248	1060*542*248	1190*542*248
Net dimension (L*W*H) (with air return box)	mm		693*511*225	823*511*225	928*511*225	1013*511*225	1143*511*225
Shipping dimension (L*W*H) (with air return box)	mm		740*542*248	870*542*248	975*542*248	1060*542*248	1190*542*248
Net dimension (L*W*H) (with air return box)	mm		693*492*246	823*492*246	928*492*246	1013*492*246	1143*492*246
Shipping dimension (L*W*H) (with air return box)	mm		740*522*263	870*522*263	975*522*263	1060*522*263	1190*522*263
Controller (optional)	Wired		HW-CA101AGK	HW-CA101AGK	HW-CA101AGK	HW-CA101AGK	HW-CA101AGK
Three way valve (optional)			3VFCE	3VFCE	3VFCE	3VFCE	3VFCE

Option:
1 Three way valve as the accessory;
2 enlarged drain pan ;

Note:
1 The tested external static pressure have no air return box &filter;
2 Above airflow&cooling capacity&heating capacity are based on the models with no air return box & filter; 97% airflow&97% cooling capacity &97% heating capacity are based on the models with air return box & filter;
3 The water inlet direction can be changed based on the actual situation , but the cooling capacity&heating capacity with reduce 15% when changing the water inlet direction ;

CEILING CONCEALED TYPE (STANDARD TYPE)

MODEL						
	No return air box		FCE-136BCN2B	FCE-170BCN2B	FCE-204BCN2B	FCE-238BCN2B
	Rear air inlet box&filter		FCE-136BCB2B	FCE-170BCB2B	FCE-204BCB2B	FCE-238BCB2B
	Bottom air inlet box&filter		FCE-136BCD2B	FCE-170BCD2B	FCE-204BCD2B	FCE-238BCD2B
Air volume	m³/h	H	1360	1700	2040	2380
		M	1034	1292	1550	1809
		L	707	884	1061	1238
	pa		30			
Cooling capacity	W	H	8600	10800	12000	13200
		M	7740	9720	10800	11880
		L	6364	7992	8880	9768
Heating capacity	W	H	13800	17500	21000	22500
		M	12006	15225	18270	19575
		L	10074	12775	15330	16425
Power input	W	H	156	174	212	253
Power supply	phase/Voltage/Hz		1/220/50			
Noise level	dB(A)	H	48	50	52	54
Water flow	l/min		24.7	31.0	34.4	37.8
Water pressure drop	KPa		40	40	40	50
Water inlet/outlet connection pipe			3/4" internal thread			
Condensate water connection pipe			3/4" external thread			
Net weight (no air return box)	kg		26.2	29.1	32.8	35.1
Gross weight (no air return box)	kg		30.1	33.4	38.1	40.4
Net weight (with air return box)	kg		31.4	34.8	39.2	42.2
Gross weight (with air return box)	kg		34.7	38.5	44.0	46.9
Net dimension (L*W*H) (no air return box)	mm		1443*470*225	1593*470*225	1813*470*225	2013*470*225
Shipping dimension (L*W*H) (no air return box)	mm		1490*542*248	1640*542*248	1860*542*248	2060*542*248
Net dimension (L*W*H) (with air return box)	mm		1443*511*225	1593*511*225	1813*511*225	2013*511*225
Shipping dimension (L*W*H) (with air return box)	mm		1490*542*248	1640*542*248	1860*542*248	2060*542*248
Net dimension (L*W*H) (with air return box)	mm		1443*492*246	1593*492*246	1813*492*246	2013*492*246
Shipping dimension (L*W*H) (with air return box)	mm		1490*522*263	1640*522*263	1860*522*263	2060*522*263
Controller (optional)	Wired		HW-CA101AGK	HW-CA101AGK	HW-CA101AGK	HW-CA101AGK
Three way valve (optional)			3VFCE	3VFCE	3VFCE	3VFCE

Option:
1 Three way valve as the accessory;
2 enlarged drain pan ;

Note:
1 The tested external static pressure have no air return box &filter;
2 Above airflow&cooling capacity&heating capacity are based on the models with no air return box & filter; 97% airflow&97% cooling capacity &97% heating capacity are based on the models with air return box & filter;
3 The water inlet direction can be changed based on the actual situation , but the cooling capacity&heating capacity with reduce 15% when changing the water inlet direction ;

CEILING CONCEALED TYPE (STANDARD TYPE)

MODEL							
	No return air box		FCE-034ACN2B	FCE-051ACN2B	FCE-068ACN2B	FCE-085ACN2B	FCE-102ACN2B
	Rear air inlet box&filter		FCE-034ACB2B	FCE-051ACB2B	FCE-068ACB2B	FCE-085ACB2B	FCE-102ACB2B
	Bottom air inlet box&filter		FCE-034ACD2B	FCE-051ACD2B	FCE-068ACD2B	FCE-085ACD2B	FCE-102ACD2B
Air volume	m³/h	H	340	510	680	850	1020
		M	258	388	517	646	775
		L	177	265	354	442	530
ESP	pa		12				
Cooling capacity	W	H	2410	3550	4550	5510	6200
		M	2169	3195	4095	4959	5580
		L	1783	2627	3367	4077	4588
Heating capacity	W	H	3700	5600	7450	8800	10200
		M	3219	4872	6482	7656	8874
		L	2701	4088	5439	6424	7446
Power input	W	H	37	52	62	76	96
Power supply	phase/Voltage/Hz		1/220/50				
Noise level	dB(A)	H	36	38	39	43	45
Water flow	l/min		6.9	10.2	13.0	15.8	17.8
Water pressure drop	KPa		30	30	30	30	40
Water inlet/outlet connection pipe			3/4" internal thread				
Condensate water connection pipe			3/4" external thread				
Net weight (no air return box)	kg		11.6	14.1	15.8	17.5	18.4
Gross weight (no air return box)	kg		13.9	16.6	18.5	20.4	21.6
Net weight (with air return box)	kg		14.2	17.2	19.2	21.2	22.5
Gross weight (with air return box)	kg		16.4	19.4	21.6	23.8	25.5
Net dimension (L*W*H) (no air return box)	mm		693*470*225	823*470*225	928*470*225	1013*470*225	1143*470*225
Shipping dimension (L*W*H) (no air return box)	mm		740*542*248	870*542*248	975*542*248	1060*542*248	1190*542*248
Net dimension (L*W*H) (with air return box)	mm		693*511*225	823*511*225	928*511*225	1013*511*225	1143*511*225
Shipping dimension (L*W*H) (with air return box)	mm		740*542*248	870*542*248	975*542*248	1060*542*248	1190*542*248
Net dimension (L*W*H) (with air return box)	mm		693*492*246	823*492*246	928*492*246	1013*492*246	1143*492*246
Shipping dimension (L*W*H) (with air return box)	mm		740*522*263	870*522*263	975*522*263	1060*522*263	1190*522*263
Controller (optional)	Wired		HW-CA101AGK	HW-CA101AGK	HW-CA101AGK	HW-CA101AGK	HW-CA101AGK
Three way valve (optional)			3VFCE	3VFCE	3VFCE	3VFCE	3VFCE

Option:
1 Three way valve as the accessory;
2 enlarged drain pan ;

Note:
1 The tested external static pressure have no air return box &filter;
2 Above airflow&cooling capacity&heating capacity are based on the models with no air return box & filter; 97% airflow&97% cooling capacity &97% heating capacity are based on the models with air return box & filter;
3 The water inlet direction can be changed based on the actual situation , but the cooling capacity&heating capacity with reduce 15% when changing the water inlet direction ;

CEILING CONCEALED TYPE (STANDARD TYPE)

AHRI CERTIFIED®
www.ahridirectory.org

MODEL						
	No return air box		FCE-136ACN2B	FCE-170ACN2B	FCE-204ACN2B	FCE-238ACN2B
	Rear air inlet box&filter		FCE-136ACB2B	FCE-170ACB2B	FCE-204ACB2B	FCE-238ACB2B
	Bottom air inlet box&filter		FCE-136ACD2B	FCE-170ACD2B	FCE-204ACD2B	FCE-238ACD2B
Air volume	m³/h	H	1360	1700	2040	2380
		M	1034	1292	1550	1809
		L	707	884	1061	1238
	pa		30			
Cooling capacity	W	H	8600	10800	12000	13200
		M	7740	9720	10800	11880
		L	6364	7992	8880	9768
Heating capacity	W	H	13800	17500	21000	22500
		M	12006	15225	18270	19575
		L	10074	12775	15330	16425
Power input	W	H	134	152	189	228
Power supply	phase/Voltage/Hz		1/220/50			
Noise level	dB(A)	H	46	48	50	52
Water flow	l/min		24.7	31.0	34.4	37.8
Water pressure drop	KPa		40	40	40	50
Water inlet/outlet connection pipe			3/4" internal thread			
Condensate water connection pipe			3/4" external thread			
Net weight (no air return box)	kg		26.2	29.1	32.8	35.1
Gross weight (no air return box)	kg		30.1	33.4	38.1	40.4
Net weight (with air return box)	kg		31.4	34.8	39.2	42.2
Gross weight (with air return box)	kg		34.7	38.5	44.0	46.9
Net dimension (L*W*H) (no air return box)	mm		1443*470*225	1593*470*225	1813*470*225	2013*470*225
Shipping dimension (L*W*H) (no air return box)	mm		1490*542*248	1640*542*248	1860*542*248	2060*542*248
Net dimension (L*W*H) (with air return box)	mm		1443*511*225	1593*511*225	1813*511*225	2013*511*225
Shipping dimension (L*W*H) (with air return box)	mm		1490*542*248	1640*542*248	1860*542*248	2060*542*248
Net dimension (L*W*H) (with air return box)	mm		1443*492*246	1593*492*246	1813*492*246	2013*492*246
Shipping dimension (L*W*H) (with air return box)	mm		1490*522*263	1640*522*263	1860*522*263	2060*522*263
Controller (optional)	Wired		HW-CA101AGK	HW-CA101AGK	HW-CA101AGK	HW-CA101AGK
Three way valve (optional)			3VFCE	3VFCE	3VFCE	3VFCE

Option:
1 Three way valve as the accessory;
2 enlarged drain pan ;

Note:
1 The tested external static pressure have no air return box &filter;
2 Above airflow&cooling capacity&heating capacity are based on the models with no air return box & fliter; 97% airflow&97% cooling capacity &97% heating capacity are based on the models with air return box & fliter;
3 The water inlet direction can be changed based on the actual situation , but the cooling capacity&heating capacity with reduce 15% when changing the water inlet direction ;

CEILING CONCEALED FAN COIL

Fan Coil Dimension

Horizontal concealed units

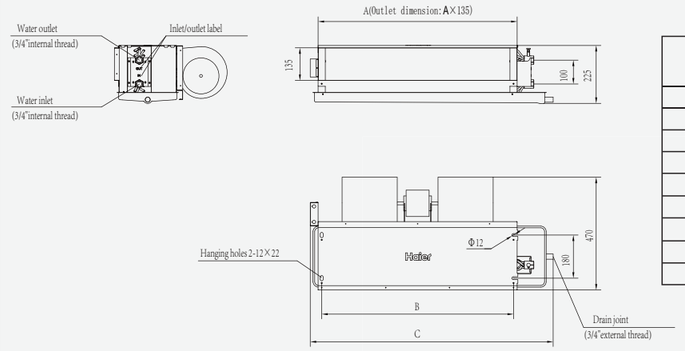

Model	Overall dimension (mm)		
	A	B	C
FCE-034	510	480	693
FCE-051	640	610	823
FCE-068	745	715	928
FCE-085	830	800	1013
FCE-102	960	930	1143
FCE-136	1260	1230	1443
FCE-170	1410	1380	1593
FCE-204	1630	1600	1813
FCE-238	1830	1800	2013

Horizontal concealed units with back return air box

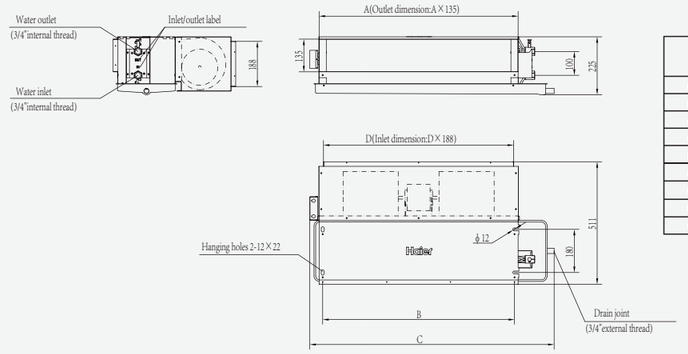

Model	Overall dimension (mm)			
	A	B	C	D
FCE-034	510	480	693	473
FCE-051	640	610	823	603
FCE-068	745	715	928	708
FCE-085	830	800	1013	793
FCE-102	960	930	1143	923
FCE-136	1260	1230	1443	1223
FCE-170	1410	1380	1593	1373
FCE-204	1630	1600	1813	1593
FCE-238	1830	1800	2013	1793

Horizontal concealed units with bottom return air box

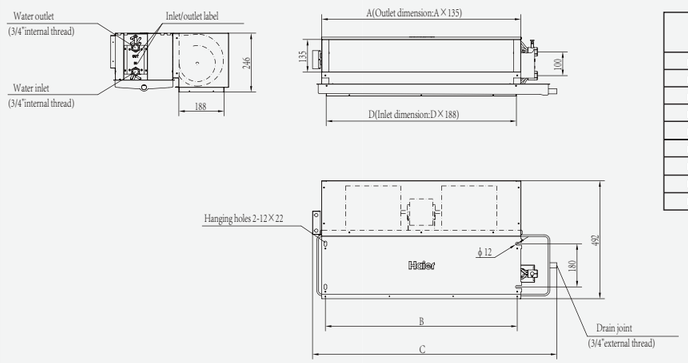

Model	Overall dimension (mm)			
	A	B	C	D
FCE-034	510	480	693	473
FCE-051	640	610	823	603
FCE-068	745	715	928	708
FCE-085	830	800	1013	793
FCE-102	960	930	1143	923
FCE-136	1260	1230	1443	1223
FCE-170	1410	1380	1593	1373
FCE-204	1630	1600	1813	1593
FCE-238	1830	1800	2013	1793

CEILING CONCEALED FAN COIL

Compact Size

Compact design

The unit dimension is 570mm x 570mm x 260mm for easy installation. It is universal and harmonious with standard ceiling 600mm x 600mm, which avoids the breakage for ceiling during installation.

Comfort

Fresh air inlet

Pre-set fresh air inlet can introduce the outside fresh air into the room, which can greatly improve the indoor air quality & keep people away from "air conditioner symptom".

Convenience swing control

Memory function in swing direction make the flap come to the direction when the cassette unit is turned on again.

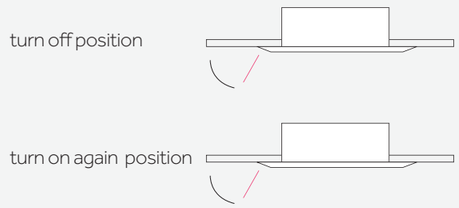

CHILLED WATER COMPACT CASSETTE

AHRI CERTIFIED® www.ahridirectory.org

MODEL			FCB-034BCN2A	FCB-051BCN2A
Air volume	m³/h	H	340	510
		M	280	420
		L	210	300
Cooling capacity	W	H	2700	3550
		M	2354	3074
		L	2014	2660
Heating capacity	W	H	4180	5660
		M	3511	4753
		L	3009	4075
Power input	W	H	37	52
Power supply	phase/Voltage/Hz		1/220/50	
Noise level	dB(A)	H	28	37
		M	26	32
		L	24	28
Water flow	l/min		7.7	10.2
Water pressure drop	KPa		10	16
Net weight	kg		18.7	18.7
Gross weight	kg		21.7	21.7
Water inlet/outlet connection pipe			Rc3/4"	
Condensate water connection pipe			DN25	
External dimension(L/W/H)	mm		570/570/260	
Packing dimension(L/W/H)	mm		718/680/380	
Panel			PB-700IB	
Panel Net/Shipping weight	kgs		2.8/4.8	
Panel Shipping dimensions(W/D/H)	mm		700/700/60	
Panel Shipping dimensions(W/D/H)	mm		740/750/115	
Controller	wireless		YR-H005	

Option: 1 Three way valve as the accessory;

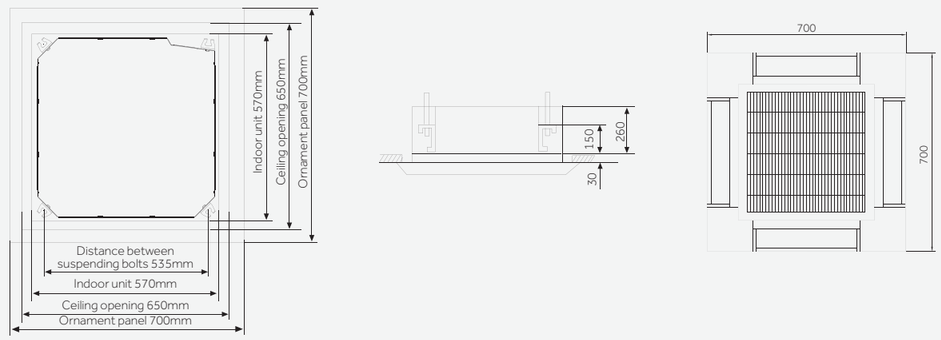

CHILLED WATER CASSETTE

Easy Design

Ultra thin design

Haier cassette height is 183mm (3.6/3.8/4.0kW), lower 220mm normal product at least, give the designer extreme flexibility in design work.

Three way valve choice

According to customer need , Haier can supply the three way valve to match with cassette and duct fan coil , give the flexibility in design work .

High Efficiency

New heat exchanger design

The area of exchanger is enlarge to increase heating efficiency.

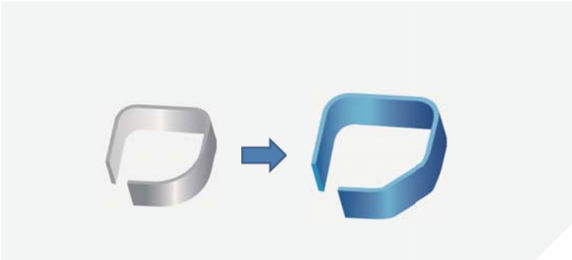

Stylish Design

"Spiral " panel

"Spiral" concept , "Haier" image .

Flap is closed when air conditioner off

There is no crack from the flap and the panel when the air conditioner off.More elegance .

Hidden LCD display

The 360°smart flow cassette have particular hidden LCD display design. Green display for cooling red display for heating, it is very easy identified by opening mode.

ABS material panel

ABS material makes the panel "piano white " , different from " dark white" PS material color.The panel and flap are the same material. After 10 years , the panel color won' t change to yellow color because the ABS material prevents discoloration against light raying.

Low Sound Level

Super big inlet grille

Compared to conventional air inlet grill, we enlarge the air inlet area by 23%, lower air speed & lower the sound level.

New designed fan

The diameter of new fan is enlarged based on acrodynamic theory, so that there is the least resistance against airflow. Reduce 3dB(A) for sound level.

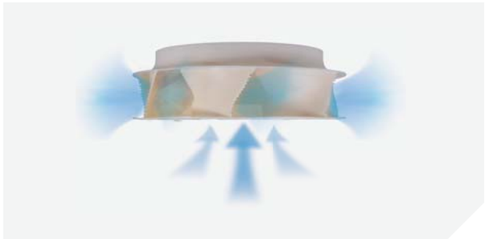

CHILLED WATER CASSETTE

Comfort Airflow

360° air supply

360° air supply without blind spot.

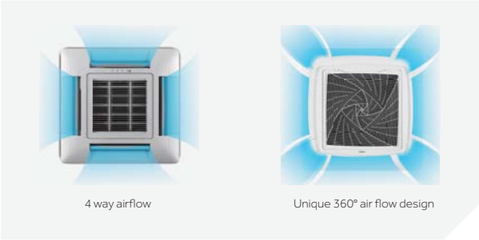

Individual flap control

The four flaps can be controlled individually according to end users by controller, providing maximum comfort throughout the room, it is a good solution to avoid "air conditioning disease".

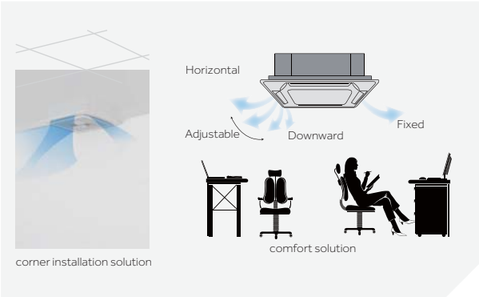

Easy Installation

Square hanger

Innovative square hanger, flexible direction adjustment , avoid second try installation.

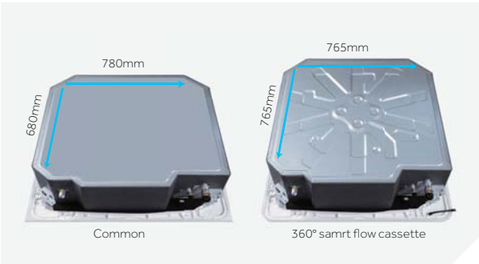

One screw for wiring

Installer can finish wiring by take down one screw.

Easy Installation

Convenient clip

There is clip to lock the panel. Just one installer can finish the screwing for panel. Save manpower and easy installation.

High lift-up drain pump

It can lifts condensed water up to 1000mm, which is more flexible to install the duct according to the layout.

FOUR-WAY CASSETTE FAN COIL

AHRI CERTIFIED® www.ahridirectory.org

MODEL			FCB-040BCN2B	FCB-058BCN2B	FCB-068BCN2B	FCB-085BCN2B	FCB-102BCN2B
Air volume	m³/h	H	400	580	680	850	1020
		M	305	465	525	700	840
		L	230	350	420	520	620
Cooling capacity	W	H	3600	3800	4000	4980	5810
		M	3132	3306	3500	4356	4943
		L	2664	2812	2970	3696	4230
Heating capacity	W	H	6000	6200	6500	8100	9450
		M	5280	5456	5780	7208	8315
		L	4560	4712	4940	6155	7182
Power input	W	H	52	55	62	71	80
Power supply	phase/Voltage/Hz		1/220/50				
Noise level	dB(A)	H	33	34	34	36	41
		M	26	28	28	32	35
		L	22	24	24	28	31
Water flow	l/min		10.3	10.9	11.5	14.4	16.7
Water pressure drop	KPa		20	21	22	28	38
Net weight	kg		24.2	24.2	24.2	26	26
Gross weight	kg		30.8	30.8	30.8	32.5	32.5
Water inlet/outlet connection pipe			Rc3/4"				
Condensate water connection pipe			DN20				
External dimension(L/W/H)	mm		840*840*183			840/840/204	
Packing dimension(L/W/H)	mm		983*983*268			983/983/290	
Panel			PB-950KB	PB-950KB	PB-950KB	PB-950KB	PB-950KB
Panel External dimensions(W/D/H)	mm		950*950*50	950*950*50	950*950*50	950*950*50	950*950*50
Panel Shipping dimensions(W/D/H)	mm		1000*1000*110	1000*1000*110	1000*1000*110	1000*1000*110	1000*1000*110
Panel Net/Shipping weight	kg		6.5/9	6.5/9	6.5/9	6.5/9	6.5/9
Controller	wireless		YR-HBS01	YR-HBS01	YR-HBS01	YR-HBS01	YR-HBS01
Three way valve (optional)			3VFCB	3VFCB	3VFCB	3VFCB	3VFCB

Option:
1 Three way valve as the accessory;

FOUR-WAY CASSETTE FAN COIL

AHRI CERTIFIED® www.ahridirectory.org

MODEL			FCB-136BCN2B	FCB-170BCN2B	FCB-204BCN2B	FCB-238BCN2B
Air volume	m³/h	H	1360	1700	2040	2380
		M	1120	1400	1650	1960
		L	840	1000	1250	1480
Cooling capacity	W	H	7600	9200	11200	12600
		M	6579	8215	9663	11162
		L	5585	7132	8500	9763
Heating capacity	W	H	12200	14800	17130	18900
		M	11223	12727	14903	16443
		L	9638	10952	12847	14175
Power input	W	H	115	152	180	228
Power supply	phase/Voltage/Hz		1/220/50			
Noise level	dB(A)	H	44	48	50	52
		M	40	40	42	48
		L	34	33	34	43
Water flow	l/min		21.8	26.4	32.1	36.2
Water pressure drop	KPa		33	40	40	50
Net weight	kg		30.5	30.5	33.2	33.2
Gross weight	kg		37.5	37.5	39.7	39.7
Water inlet/outlet connection pipe			Rc3/4"			
Condensate water connection pipe			DN20			
External dimension(L/W/H)	mm		840*840*246		840*840*288	
Packing dimension(L/W/H)	mm		983*983*329		983*983*378	
Panel			PB-950KB	PB-950KB	PB-950KB	PB-950KB
Panel External dimensions(W/D/H)	mm		950*950*50	950*950*50	950*950*50	950*950*50
Panel Shipping dimensions(W/D/H)	mm		1000*1000*110	1000*1000*110	1000*1000*110	1000*1000*110
Panel Net/Shipping weight	kg		6.5/9	6.5/9	6.5/9	6.5/9
Controller	wireless		YR-HBS01	YR-HBS01	YR-HBS01	YR-HBS01
Three way valve (optional)			3VFCB	3VFCB	3VFCB	3VFCB

Option:
1 Three way valve as the accessory;

CHILLED WATER CASSETTE

Chilled Water Cassette Dimension

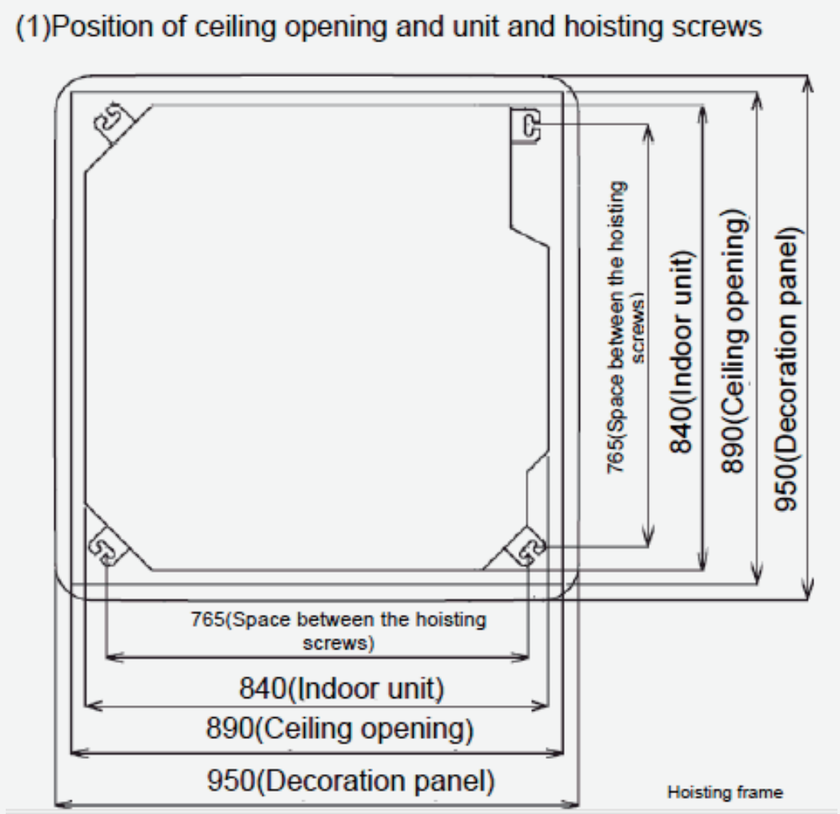

REFERENCE PROJECTS

Oil Free Centrifugal Chiller Project



Country: Hong Kong China
Project Name :
Hong kong north lantau hospital
Product Series:
Air-cooled oil free centrifugal chiller



Country: Australia
Project Name :
Marland Mushroom Farm
Product Series:
Air-cooled oil free centrifugal chiller



Country: Czech
Project Name :
Svoboda Press s.r.o.
Product Series:
Air-cooled oil free centrifugal chiller

Oil Free Centrifugal Chiller Project

Country : China
Project Name:
Beijing world trade building
Product Series:
Water-cooled oil free centrifugal chiller

Country: China
Project Name:
Henan Nanyang longxin National hotel
Product Series:
Water-cooled oil free centrifugal chiller

Country: China
Project Name:
Nanjing drum tower hospital
Product Series:
Water-cooled oil free centrifugal chiller

Country: China
Project Name :
Shenzhen real estate investment office building
Product Series:
Water-cooled oil free centrifugal chiller

Country: China
Project Name :
Zhengzhou civil aviation airport jianguo hotel
Product Series:
Water-cooled oil free centrifugal chiller

Country: China
Project Name:
Chongqing Honeywell car factory
Product Series:
Water-cooled oil free centrifugal chiller

Country: China
Project Name:
Nanjing landscape hotel
Product Series:
Water-cooled oil free centrifugal chiller

Country: China
Project Name :
Beijing metro fangshan line
Product Series:
Water-cooled oil free centrifugal chiller

REFERENCE PROJECTS

Oil Free Centrifugal Chiller Project


Country: Hong Kong China
Project Name :
Tai Po Hospital
Product Series:
Oil Free Centrifugal Chiller



Country: Hong Kong China
Project Name :
Tseung Kwan O Hospital
Product Series:
Oil Free Centrifugal Chiller

Country: Hong Kong China
Project Name :
Kimberley Hotel
Product Series:
Oil Free Centrifugal Chiller


Country: Hong Kong China
Project Name :
Hong Kong Eye Hospital
Product Series:
Oil Free Centrifugal Chiller

Oil Free Centrifugal Chiller Project


Country: Hong Kong China
Project Name :
Queen Elizabeth Hospital
Product Series:
Oil Free Centrifugal Chiller

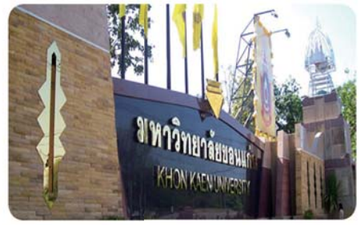

Country: Thailand
Project Name :
Khonkaen University Hospital
Product Series:
Water cooled oil free centrifugal chiller


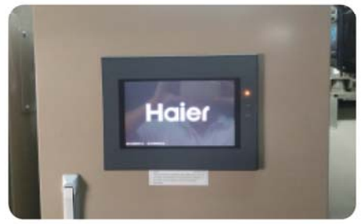

Country: Thailand
Project Name :
Khonkaen University Hospital
Product Series:
Water cooled oil free centrifugal chiller

Air-cooled Modular Chiller Project

Country: Algeria
Project Name :
El manara center,blida,algeria
Product Series:
Air-cooled module chiller

Country: Bulgaria
Project Name :
Building 6, business park sofia
Product Series:
Air-cooled modular chiller

Country: Bulgaria
Project Name :
Building 2a, business park sofia
Product Series:
Air-cooled modular chiller

REFERENCE PROJECTS

Air-cooled Modular Chiller Project



Country: Iran
Project Name :
Farnahad Office Building
Product Series:
R22 Air-cooled modular chiller



Country: Iran
Project Name :
Monjie Hotel
Product Series:
R22 Air-cooled modular chiller


Country: Hungary
Project Name :
Hungaroring f1 budapest
Product Series:
Air-cooled modular chiller

Country: China
Project Name :
Heilongjiang province military sub-district
Product Series:
Air-cooled modular chiller

Air-cooled Modular Chiller Project

Country: Hong Kong China
Project Name :
Bonham strand project,hongkong
Product Series:
Air-cooled module chiller

Country: China
Project Name :
Jinan lanxiang technical school
Product Series:
Air-cooled modular chiller


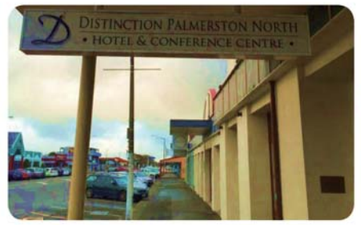

Country: New Zealand
Project Name :
Distinction Hotel
Product Series:
R410A Air-cooled Modular chiller


Country: Spain
Project Name :
Chinese consulate general in Barcelona
Product Series:
R410A Air-cooled Modular chiller

REFERENCE PROJECTS

Water-cooled Screw Chiller Project



Country: Pakistan
Project Name :
Zong CMPak Headquarters
Product Series:
R134a Water-cooled screw chiller

Air-cooled Screw Chiller Project



Country: Hong Kong China
Project Name :
Fung kai innovative school
Product Series:
Air-cooled screw chiller

Country: China
Project Name :
Shanghai ruijin hospital
Product Series:
Air-cooled screw chiller

Haier