Haier Commercial Air Conditioning

ADDRESS
No.1 Haier Road, Hi-tech Zone, Qingdao 266101 P.R.China

CONTACTS
Tel: +86-532-8893-6938
B2B Website: www.haierac.com
B2C Website: www.haier.com

The specifications, designs and information in this brochure are subject to the actual products. Haier reserves the right to make change without any notice.

Haier

2017 General Catalogue

Super Match 50/60Hz R410a

Nov 2016

Version 2.0

Haier

Super Match

50/60Hz R410a

2017 General Catalogue

Haier Commercial Air Conditioning

Haier B2B Platform

The Haier Air-conditioning dealer portal (www.haierac.com) is a platform to help Haier distributors, installer and professional personnels better understand and make business with Haier globally.

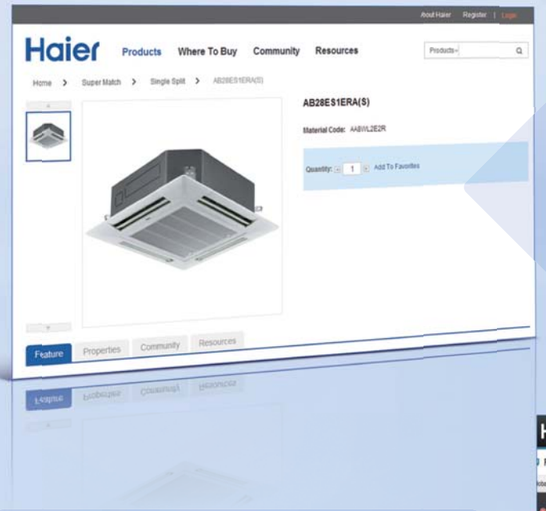

The portal becomes the official new product release channel, offering the latest materials of Haier A/C products with high resolution pictures, project reference to help our business partners understand how our solutions help the end users globally.

This platform offers an opportunity for our business partners to share projects, applications and other exciting stories with Haier.

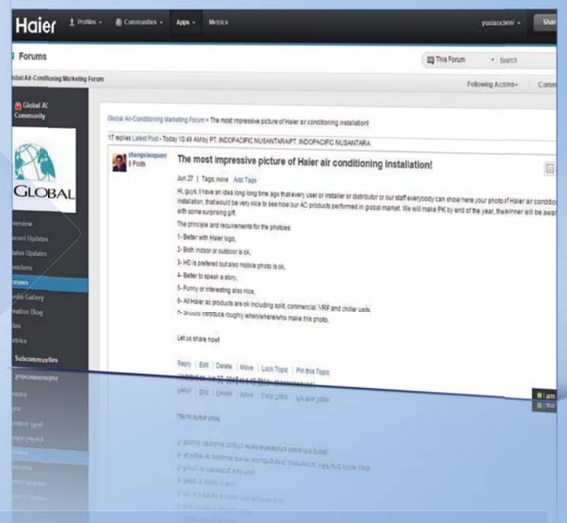

This platform offers a community environment for our business partner to attain valuable resources, including catalogue, brochures, leaflat and other marketing documents. Moreover, the platform is a convenient place where all business partners can communicate with Haier directly.

http://www.haierac.com

Haier Brand Story

The Internet era is a diverse and unconventional time, where "one size fits all" products and solutions simply aren' t enough. Customers want to be treated as individuals and respected for who they are.
Everyone wants their unique lifestyle acknowledged. That is why Haier listens closely to you in order to gain a genuine understanding of what is going on in your life and what is on your mind. So each of you can get the smart home experience you deserve: be it simple, sophisticated, organized or enjoyable.
As a worldwide industry leader, Haier innovates beyond products and solutions and turns the organization into a wholly connected platform. In doing so, internal and external resources are connected quickly and easily. We believe only by doing so, we can best meet our consumers' expectations in this rapidly evolving world.
Be part of the Haier Network. Create new possibilities.

Haier Global Network

Haier has built up its infrastructures globally to meet the customers' quick evolving demands, including R&D centers, production facilities, trading companies and sales networks etc.
Haier's five R&D centers around the world have forged strategic partnerships with first-class suppliers, research institutions, and prestigious universities to create an innovative ecosystem composed of internal and external scientists and engineers connected by virtual and physical networks.

Worldwide Network	Overseas	Global
Trading Company	24	66
R&D Center	4	5
Manufactory	24	24
Industry Park	7	21
Sales Network	37.683	143.330

Haier Global Revenue

Established in 1984, Haier is the world's No. 1 major appliance brand. In the Internet age, Haier aims to become a Networked Enterprise and its global revenue reaching 30.2 billion USD in 2015.

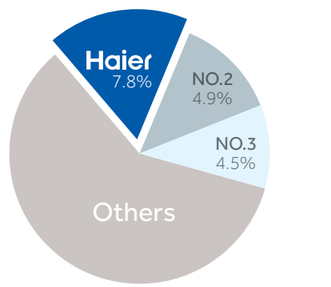

Haier has been honored as the world' s largest home appliance brand with a 9.8% retail volume share in 2015 marketing for seven consecutive years.(Data source: Euromonitor)

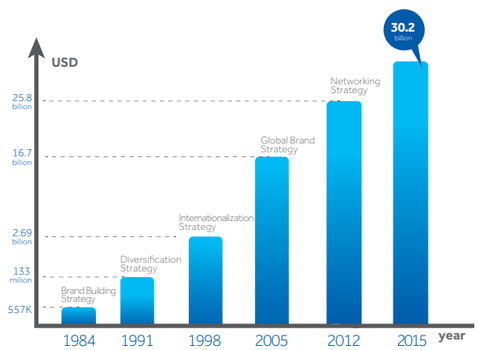

Haier AC Milestones

Brief of R&D Center

Setting New Standards: Haier's new state of the art HVAC R&D Center commences operation in March, 2014

Driving across the world's longest bridge into the beautiful coastal city of Qingdao and taking the off-ramp to the massive Haier Industrial Park, you will find the world's most advanced HVAC R&D center and its adjacent height drop testing facility towering over other buildings in the park. The commencement of the R&D center puts Haier in the leadership position to provide the best HVAC product solutions suitable for different climates and environments around the globe.

Entering the lobby you will be awed by the installation and display of Haier's world leading magnetic bearing oil free centrifugal chiller that cools the building. Also in display are Haier's latest innovation of residential and commercial products and BMS control solutions.

The 6 story buildng houses 1,000 plus experienced engineers and technicians, and is equipped with 120 test labs. From psychrometric labs that accurately measure product capacity and efficiency to acoustic labs that reduces sound level; from environment simulators to sustainability test labs that ensure product reliability under the harshest ambient conditions, Haier engineers work hand in hand with international team of experts to turn out green and user friendly climate control solutions.

The height drop test tower, standing 106 meters tall, is the tallest test tower of its kind. It allows Haier's latest MRV products to test under all kinds of installation scenarios.

The stage is set, and Haier is ever more ready to provide global customers with world class products. The new R&D Center is the testament of Haier's commitment and vision in being the leading player in the global HVAC industry.

Global Manufacturing Capacity

Domestically, Haier AC is running 9 factories, 1 of which is MHAQ, a JV between Haier and Mitsubishi Heavy. In overseas markets, Haier is running 7 manufacturing plants.
With all these factories, Haier AC has a product capacity amounts to 20.1 million sets per year.

2016 NEW PRODUCT

NEW

16

Smart Power
Inverter outdoor unit
1UH140P1ERG

- 1/220-240/50/60 for 14kw ;

42

Super match
Inverter outdoor unit
1U24GS1ERA/ 1U28HS1ERA(S)/1U36HS1ERA(S)/
1U48LS1ERA(S)/ 1U60LS1ERB(S)

- -25 cooling operation , give the solution for the equipment room ;
- Inverter 24/28/36/48/60K, full solution ;
- Work in rotation (8/10/12/24 hours setting) , 12 hours setting as default (YCJ-A002 required)
- Wifi control are capable to remote control the unit , also malfunction signal can be sent to mobile phone;

23

Smart Power
High external static pressure unit
ADH105H1ERG/ ADH125H1ERG/ ADH140H1ERG

- 3600m3/h air flow for 14kw , air flow above 252m3/h/kw(70l/s/kw) , suit for design;
- 210 Pa external static pressure , suit for design;
- Top panel/side panel/ bottom panel are capable to knock down for maintenance , easy for installer work ;
- 10 ESP setting give the flexibility in the installation , easy for installer work ;
- Wifi control is capable , control every where for end user;
- Four speed +turbo mode give the maximum comfort for the end user;

125

Super match
Fixed-speed outdoor unit
1U48LS2EAB(S)/ 1U60IS3EAB(S)

- -25 cooling operation , give the solution for the equipment room ;
- Fan speed controller regulate different class fan speed for stable operation;
- Work in rotation (8/10/12/24 hours setting) , 12 hours setting as default (YCJ-A002 required)
- Wifi control are capable to remote control the unit , also malfunction signal can be sent to mobile phone;

CONTENTS

R410a T1 50/60Hz

SUPER MATCH-SMART POWER 05
SUPER MATCH-CLASSIC POWER 27
SUPER MATCH-MAXI SPLIT 63
SUPER MATCH-MULTI SPLIT 71
SUPER MATCH-ON/OFF 119
DIMENSIONS 133

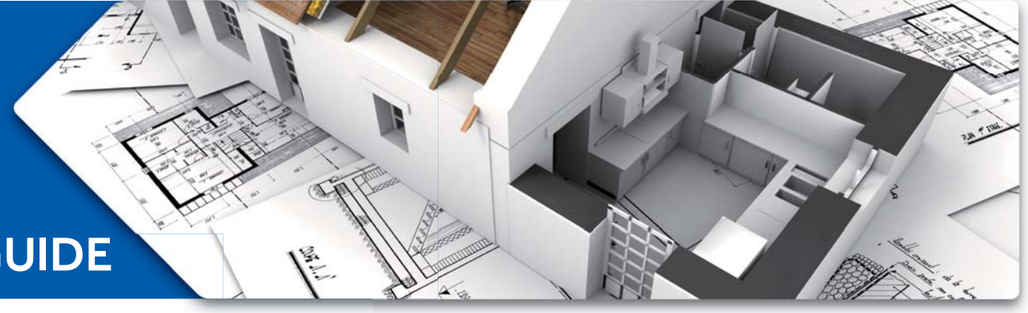

ICON GUIDE

Energy Saving

A-PAM DC inverter — A-PAM inverter technology is the upgrade of 180°sine wave inverter , it adopts additional momental control to decrease the vibration in the low compressor frequency and also contribute to great energy saving.

180° sine wave DC inverter — 180° sine wave DC inverter control technology , guarantee the reliable comfort and energy saving

DC motor — DC motor ensures more reliable operation with much higher energy saving and lower noise.

Energy class A++ — High performance get A++ level European standare

Sleep mode — The setting temperature and the indoor noise can be adjusted to a more comfortable level when you set"sleep mode" during night sleep.

Smart

Wi-Fi control — Control your air conditioning system with smart phone or tablet which can connect internet

Group controller — The wired controller can control at most 16 indoor units and operate the indoor units synchromously.

Central control — The central contorl system offers you a smart and convenient experience while managing your air conditioner individually or by groups or by zones

BMS — The building management modules could perfectly integrate air conditioners into the building management system,providing an excellet solution for large commercial areas

On-Off card — Control the system with a room card in the remote place through the level signal. It is widely adopted in the building, hotel or other commercial space. Convenient for management.

Move eye intelligent system — Move eye intelligent system not only can catches you wherever you go for super cooling, but also avoid direct blow for your comfort

Health

Fresh air channel — The preset fresh air channel can bring the outside fresh air into the room, improve the room air quality, creat fresh and comfort atmosphere

Premium filter — Effectively prevent the smaller dust articles, insects and other materials coming into the room.

Evaporator self-cleaning — With a new-generation hydrophilic foil, when the air conditioner in cooling or drying mode, the dust on evaporator will be taken away by condensed water flowing rapidly.

Comfort

Super quiet — Optimize the noise control technology,such as frequency adjustment,fan speed control and air flue design decreasing noise level lowest to 18 dB(A).

Quiet operation — The powerful airflow is guaranteed with thinner blades,random pitch design results lower noise

Low sound — Super quiet 50dB(A)thanks to new airflow system and air outlet grille

Left & Right airflow — With specialized motor and flaps the airflow can be justed horizontally and automaitically

Far distance air supplying — The air conditioner can always provide perfect air for a far distance.

360°airflow — Unique 360°airflow no blind spot,increase comfort.

4-way airflow — The front air deflectors are adjustable for horizontal or vertical air-conditioning. The airflow can be directed to air-condition the whole room or even a particular point.

3D auto airflow — The 3D airflow is able to deliver the airflow horizontally and vertically, so bring the feeling like nature wind.

Wide-angle airflow — Large louvers and a wide-swing angle range provide even temperatures throughout the room

Comfort

4 way independent air flow — Innovative 4 motors that can realize independent air flow control

Auto mode — According to temperature differential between the environment temp and the setting tempe,the unit will adjust the operation mode automatically.

Auto-swing — The airflow is directed downwards during heating process.For cooling operation auto deflection control provides comfortable cool air up and down to every conrner of the room.

DRY function — When the unit working in dry mode, it can adjust the indoor fan motor speed automatically according to the temperature gap between setting temperature and room temperature so as to get mild dehumidification or strong dehumidification.

Convenience

Super match — The innovative SUPERMATCH range realizes universal indoor & outdooor 100% free combination,which make management of sales,warehouse and spare parts much more easier and more efficient.

Weekly timer — A special controller is designed o realize a 7 days working state programming

24 hours timer — Use the timer function to set on or off or from on to off, or from off to on etc.,

Auto restart — The function permits automatic return to previous operation conditions after a sudden power break.

Smart defrosting — Haier smart defrost process is only performed when needed which reduces energy waste by eliminating the unneeded defrosting process.Enjoy maximum comfort in heating operation by reducing defrosting time.

Child lock — Avoid the child's wrong operation on the remote controller.

Double 8 display — Simple 88 display shows clearly the indoor unit setting temperature(when setting) or room temperature(after setting).

4 fan settings — Select the fan speed Lo,Mid,Hi,Auto

Adjustable E.S.P — Optimise air duct work installation, maintain airflow and sound levels as required

Two-way drain — For installation convenience, connective piping and drainage housing can be attached to the left or the right side of the indoor units.

Drain water pump — Drain water lift-up mechanism, creating the ideal solution for perfect water drainage, offers more flexible installation.

Quick insllation — The cassette drain pipe prevents leaks and is easier to install with no need to use tape or adhesives

Branch outlet — The cassette unit is fit with branch outlet,it can use the same indoor unit to cool another smaller room nearby

Compact design — Most of the units are designed to have ultra thin for an easier installation

Built-in valve — The outdoor new built-in valve design,it can realize 4 way pipe connection (front,rear,right,down),flexible installation

Widely electricity Hz — Equipped with various DC components, the unit is applicable both for 50Hz and 60Hz electricity condition.

Reliability

-15°C heating — A special design for heating in cold winter even at -15°C with rotary compressor, etc.

-20°C heating — A special design for heating in cold winter even at -20°C with rotary compressor,DC motor,optimized bottom plate,electric heating wire and special defrosting programme etc.

-10°C cooling — Special design for cooling even at lowest ambient temperature -10℃ with high frequency rotary compressor, optimized refrigerant system and special defrosting program etc.

-15°C cooling — Special design for heating even at lowest ambient temperature -15°C with high frequency rotary compressor,optimized refrigerant system and special defrosting programme etc.

Self-diagnosis function — A monitoring system turns off and protects the air conditioner if an issue is detected. The error or protection code is then displayed on the indoor unis.

3 minutes protection — The 3 minutes protection of the compressor can avoid some damages to it and makes the compressor have a longer life.

SUPER MATCH
SMART POWER

| 05 Models Line-up
| 07 Benefits
| 09 Key Feature
| 11 Round Way Cassette
| 15 Cassette Type
| 17 Medium ESP Duct
| 21 High ESP Duct

MODELS LINE-UP

SMART POWER

Series kW	7.1	9.0	10.0		12.5	14.0
Universal outdoor unit	1UH071N1ERG	1UH090N1ERG	1UH105N1ERG		1UH125P1ERG 1UH125P1ERK	NEW 1UH140P1ERG 1UH140P1ERK
Cassette type	ABH071H1ERG	ABH090H1ERG	ABH105H1ERG		ABH125K1ERG	ABH140K1ERG
Medium ESP duct type	ADH071M1ERG	ADH090M1ERG 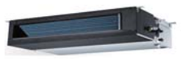	ADH105M1ERG		ADH125M1ERG	ADH140M1ERG
High ESP duct type			NEW ADH105H1ERG		NEW ADH125H1ERG	NEW ADH140H1ERG

BENEFITS

SuperMatch

SERIES	MODEL	ENERGY SAVING				SMART							HEALTH		COMFORT												
		DC INVERTER 180° sine wave DC inverter	DC motor	A++ Energy class A++	Sleep mode	WIFI Wi-Fi control	Group control Group controller	Central control Central control	BMS BMS*	On-Off card	Move eye intelligent system	Fresh air channel	Premium filter	Evaporator self-cleaning	Super quiet	Quiet operation	Outdoor low sound	Left & Right airflow	Far distance air supplying	360°airflow	4-way airflow	3D auto airflow	Wide-angle airflow	4 way independent airflow	Auto mode	AUTO Auto-swing	DRY DRY function
Cassette type	ABH071H1ERG	√	√	√	√	√	√	√	√	√	√	√	√	√	√	√	√			√			√	√	√	√	√
	ABH090H1ERG	√	√	√	√	√	√	√	√	√	√	√	√	√	√	√	√			√			√	√	√	√	√
	ABH105H1ERG	√	√	√	√	√	√	√	√	√	√	√	√	√	√	√	√			√			√	√	√	√	√
	ABH125K1ERG	√	√		√	√	√	√	√	√	√	√	√	√	√	√	√			√			√	√	√	√	√
	ABH140K1ERG	√	√		√	√	√	√	√	√	√	√	√	√	√	√	√			√			√	√	√	√	√
Medium ESP duct type	ADH071M1ERG	√	√	√	√	√	√	√	√	√		√	√	√	√	√	√								√		√
	ADH090M1ERG	√	√	√	√	√	√	√	√	√		√	√	√	√	√	√								√		√
	ADH105M1ERG	√	√	√	√	√	√	√	√	√		√	√	√	√	√	√		√						√		√
	ADH125M1ERG	√	√		√	√	√	√	√	√		√	√	√	√	√	√		√						√		√
	ADH140M1ERG	√	√		√	√	√	√	√	√		√	√	√	√	√	√		√						√		√
High ESP duct type	ADH105H1ERG	√	√		√	√	√	√	√	√		√		√		√	√		√						√		√
	ADH125H1ERG	√	√		√	√	√	√	√	√		√		√		√	√		√						√		√
	ADH140H1ERG	√	√		√	√	√	√	√	√		√		√		√	√		√						√		√

*BMS control is the function in the future

SERIES	MODEL	CONVENIENCE									CONVENIENCE							RELIABILITY					
		Super match	Weekly timer	24 hours timer	Auto restart	Smart defrosting	Child lock	Double 8 display	4 fan settings	Adjustable E.S.P	Two-way drain	Drain water pump	Branch outlet	Quick installation	Compact design	Built-in valve	Widely electricity Hz	-15°C heating	-20°C heating	-10°C cooling	-15°C cooling	Self-diagnosis function	3 min 3 minutes protection
Cassette type	ABH071H1ERG	√	√	√	√	√	√	√	√			√	√	√	√	√	√		√		√	√	√
	ABH090H1ERG	√	√	√	√	√	√	√	√			√	√	√	√	√	√		√		√	√	√
	ABH105H1ERG	√	√	√	√	√	√	√	√			√	√	√	√	√	√		√		√	√	√
	ABH125K1ERG	√	√	√	√	√	√	√	√			√	√	√		√	√		√		√	√	√
	ABH140K1ERG	√	√	√	√	√	√	√	√			√	√	√		√	√		√		√	√	√
Medium ESP duct type	ADH071M1ERG	√	√	√	√	√	√		√	√	√	√		√	√	√	√		√		√	√	√
	ADH090M1ERG	√	√	√	√	√	√		√	√	√	√		√	√	√	√		√		√	√	√
	ADH105M1ERG	√	√	√	√	√	√		√	√	√	√		√	√	√	√		√		√	√	√
	ADH125M1ERG	√	√	√	√	√	√		√	√	√	√		√	√	√	√		√		√	√	√
	ADH140M1ERG	√	√	√	√	√	√		√	√	√	√		√	√	√	√		√		√	√	√
High ESP duct type	ADH105H1ERG	√	√	√	√	√	√		√	√				√	√	√	√		√		√	√	√
	ADH125H1ERG	√	√	√	√	√	√		√	√				√	√	√	√		√		√	√	√
	ADH140H1ERG	√	√	√	√	√	√		√	√				√	√	√	√		√		√	√	√

√ : Standard √ : Optional

KEY FEATURE

High Efficiency

High performance

Smart power series get world class energy efficiency, meet the energy saving requirement for end user, eurovent standard.

	SEER / SCOP			EER / COP	
COMBINATION	7.1kW	9.0kW	10.0kW	12.5kW	14.0kW
	A++/A+	A++/A+	A++/A+	A/A	A/A
	A++/A+	A++/A+	A++/A+	A/A	A/A
			A/A	A/A	A/A

Low standby power

New PCB programme, cut the outdoor unit electrical parts power consumption in standby mode.

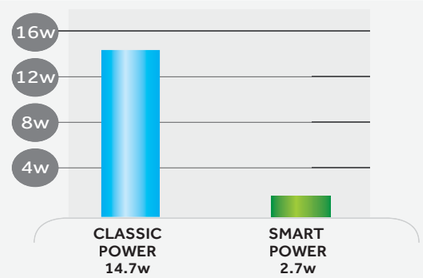

New designed fan

Based on aerodynamics theory, we create 550mm super big diameter helix fan, air flow increase 16.7%.

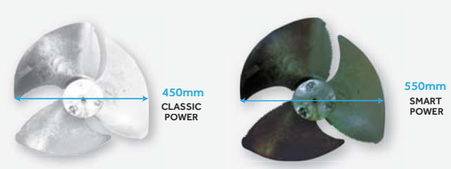

High Efficiency

DC inverter system

For the purpose of high seasonal performance, we take high discharge DC inverter compressor and DC fan motor with different running speed in different working conditions.

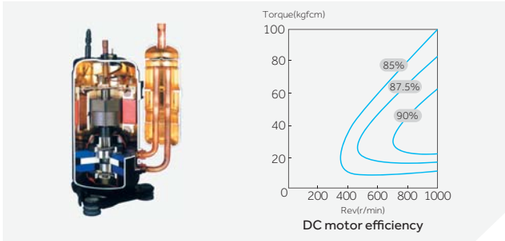

Low Sound Level

New designed air flow system

47dB(A) low sound level thanks to new airflow system which combined by new 550mm big diameter fan and air outlet grill, which reduce air resistance.

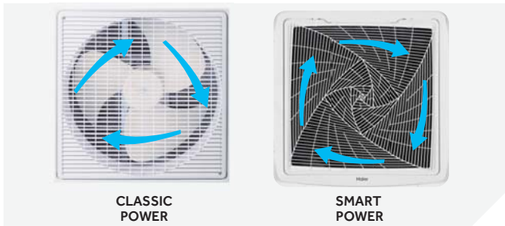

Stylish Design

Built-in valve design

The new built-in valve design, it can realize 4 way pipe connection(front, rear, right, down), it is more beautiful and easy installation.

Easy Installation

Double side 4 handles

Because of double side 4 handles design, it is very easy for 2 peoples carry it.

"888" digital test panel

All running parameters & error code can be checked from "888" digital display , installer can make easy work.

Wired controller data check

Running parameters can be checked by controller , if installer is not easy to go to the outdoor unit site , just stay indoor to check ,installer can make easy work.

ROUND WAY CASSETTE

High Efficiency

DC fan motor

Haier cassette adopts DC fan motor,compared to conventional AC fan motor, DC fan motor is more efficiency.

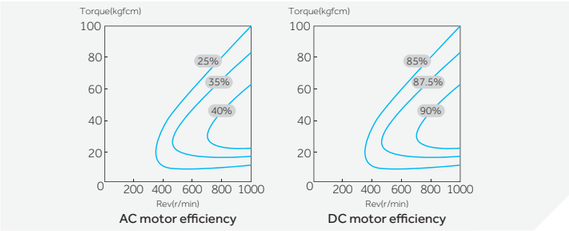

New heat exchanger design

The area of exchanger is enlarge to increase heating efficiency.

Stylish Design

"Spiral " panel

"Spiral" concept , "Haier" image .

Flap is closed when air conditioner off

There is no crack from the flap and the panel when the air conditioner off.More elegance .

Stylish Design

Hidden LCD display

The 360°smart flow cassette have particular hidden LCD display design. Green display for cooling red display for heating, it is very easy identified by opening mode.

ABS material panel

ABS material makes the panel "piano white " , different from " dark white" PS material color.The panel and flap are the same material. After 10 years , the panel color won' t change to yellow color because the ABS material prevents discoloration against light raying.

Low Sound Level

Super big inlet grille

Compared to conventional air inlet grill, we enlarge the air inlet area by 23%, lower air speed & lower the sound level.

New designed fan

The diameter of new fan is enlarged based on acrodynamic theory, so that there is the least resistance against airflow. Reduce 3dB(A) for sound level.

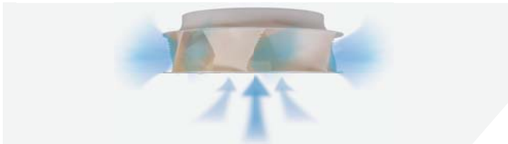

Low Sound Level

Fan speed programme

Besides 3 normal speeds, we set one extra least fan speed, totally 4 speeds. Sound level reduce 3 dB extra.

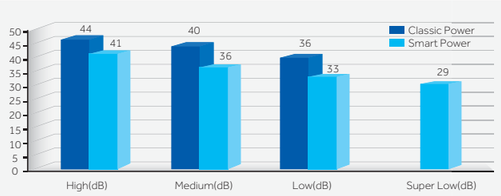

Series	Classic Power	Smart Power
Cooling Capacity	8kW	9kW
Model	AB28ES1ERA(S)	ABH090H1ERG

Comfort Airflow

Round way air supply

Round way air supply without blind spot.

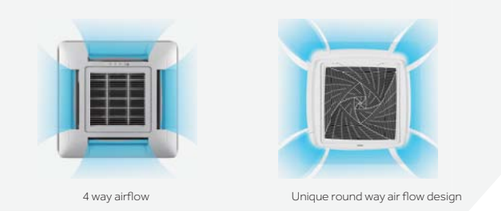

Individual flap control

The four flaps can be controlled individually according to end users by controller, providing maximum comfort throughout the room, it is a good solution to avoid "air conditioning disease".

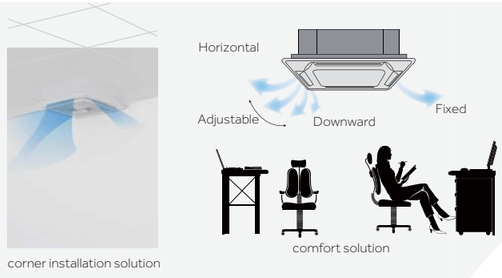

ROUND WAY CASSETTE

Comfort Airflow

High ceiling mode

Lots of shops are 5 meters high ceiling. This model can be installed in 4.5 metres height. The best solution for high ceiling shop.

*By wired controller YR-E17/YR-E16A to realize the function.

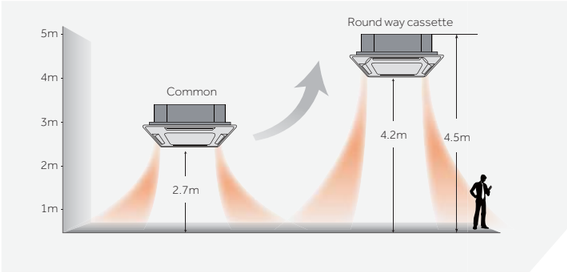

Easy Installation

Square hanger

Innovative square hanger, flexible direction adjustment, avoid second try installation.

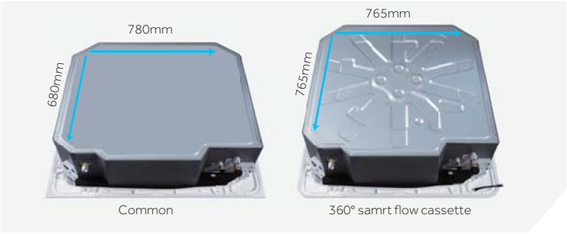

Undoing only one screw

Installer can finish wiring by undoing one screw.

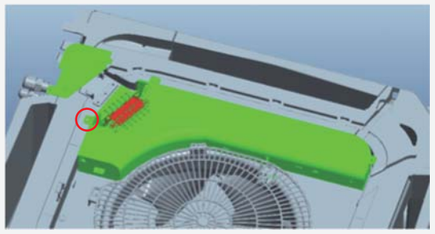

Easy Installation

Convenient clip

There is clip to lock the panel. Just one installer can finish the screwing for panel. Save manpower and easy installation.

High lift-up drain pump

It can lifts condensed water up to 1000mm, which is more flexible to install the duct according to the layout.

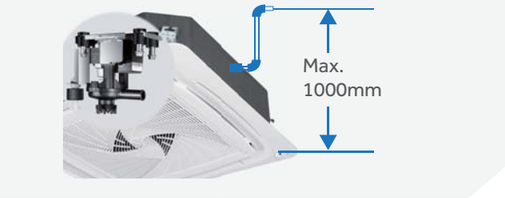

Move eye intelligent system (optional)

Absence mode

The presence sensor can check if there is end user in the room. Then change the setting degree if there is nobody in the room. Energy consumption will be reduced 27% (estimated) .

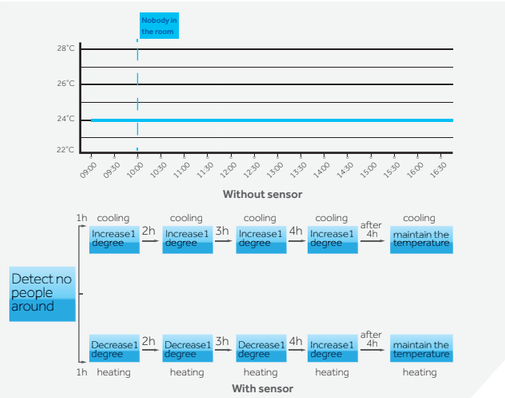

Move eye intelligent system (optional)

Automatic airflow direction

The airflow will follow or evade the end user in accordance with end user choice on controller.

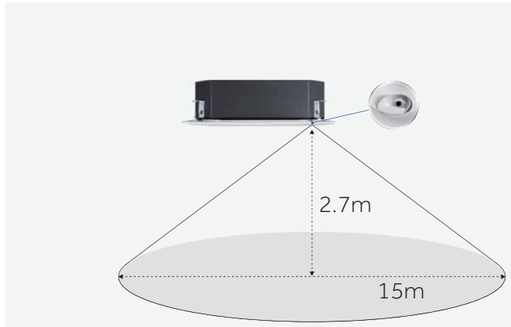

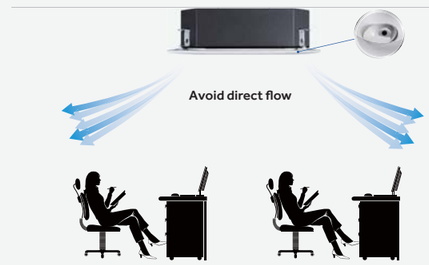

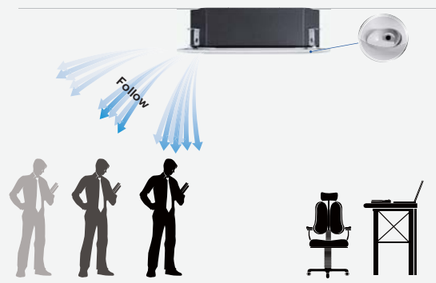

CASSETTE TYPE

MEPS COMPLIANT

EUROVENT CERTIFIED PERFORMANCE

ABH071H1ERG ABH090H1ERG ABH105H1ERG

YR-HBS01

YR-E17

7.1kW,9kW,10kW

DC INVERTER 180° sine wave | DC motor | A++ Energy class | Sleep mode | Group control | Central control | BMS | On-Off card | Fresh air channel | Premium filter | Evaporator self-cleaning | Super quiet | Quiet operation | Low noise | 360°airflow | Wide-angle airflow | 4 way independent air flow | Auto mode | AUTO Auto-swing | DRY DRY function | Super match | 24 hours timer | Auto restart | Smart defrosting | Child lock | Double 8 display | 4 fan settings | Drain water pump | Branch outlet | Quick installation | Compact design | Built-in valve | 50 or 60 Hz Widely electricity Hz | -20°C heating | -15°C cooling | Self-diagnosis function | 3 min 3 minutes protection

Model			Indoor unit	ABH071H1ERG	ABH090H1ERG	ABH105H1ERG
			Outoor unit	1UH071N1ERG	1UH090N1ERG	1UH105N1ERG
Nominal performance data	Capacity	Nominal cooling	Btu/h	24200	30700	34100
			kW (min-max)	7.1 (2.0~8.0)	9 (2.5~10)	10 (2.5~11)
		Nominal heating	Btu/h	27300	34450	36150
			kW (min-max)	8 (2.0~9.0)	10.1 (2.5~11)	10.6 (2.5~11.3)
	Rated power input	Cooling	kW (min-max)	1.92 (0.4~4.0)	2.56 (0.5~4.4)	2.99 (0.5~4.9)
		Heating	kW (min-max)	2.0 (0.4~4.0)	2.61 (0.5~4.4)	2.79 (0.5~4.9)
	EER			3.7	3.52	3.34
	COP			4	3.87	3.8
Seasonal performance data	Cooling P design(35°C)		kW	7.1	9	10
	Heating P design(-10°C)		kW	6	8.1	8.2
	SEER/SCOP			6.3/4.2	6.3/4.1	6.8/4.1
	Energy class (Cooling/Heating)			A++/A+	A++/A+	A++/A+
	Annual energy consumption(Cooling)		kW	377	516	538
	Annual energy consumption(Heating)		kW	1899	2798	2900
Indoor unit						
Elec. parameters	Power supply		Ph/V/Hz	1/220~240/50/60	1/220~240/50/60	1/220~240/50/60
Performance	Air flow(H/M/L)		m^3/h	1260/1070/820/680	1470/1260/1050/940	1680/1530/1320/1190
	Sound power level(H/M/L)		dB(A)	52	57	62
	Sound pressure level(H/M/L)		dB(A)	36/33/29/26	41/36/33/29	45/42/38/34
Installation	External dimensions(W/D/H)		mm	840/840/246	840/840/246	840/840/246
	Shipping dimensions(W/D/H)		mm	990/990/310	990/990/310	990/990/310
	Net/Shipping weight		kg	31/36	31/36	31/36
	Wireless Controller		Optional	YR-HBS01	YR-HBS01	YR-HBS01
	Wired Controller		Optional	YR-E17	YR-E17	YR-E17
Panel	Panel Model			PB-950KB(standard panel) /PB-950MB(sensor panel)	PB-950KB(standard panel) /PB-950MB(sensor panel)	PB-950KB(standard panel) /PB-950MB(sensor panel)
	External dimensions(W/D/H)		mm	950/950/50	950/950/50	950/950/50
	Shipping dimensions(W/D/H)		mm	1000/1000/110	1000/1000/110	1000/1000/110
	Net/Shipping weight		kg	6.5/9	6.5/9	6.5/9
Outdoor unit						
Elec. parameters	Power supply		Ph/V/Hz	1/220~240/50/60	1/220~240/50/60	1/220~240/50/60
Performance	Air flow (H)		m^3/h	3200	3500	4000
	Sound power level		dB(A)	66	67	68
	Sound pressure level		dB(A)	49	51	52
Installation	External dimensions(W/D/H)		mm	965/950/370	965/950/370	965/950/370
	Shipping dimensions(W/D/H)		mm	1095/1050/450	1095/1050/450	1095/1050/450
	Net/Shipping weight		kg	80/92	80/92	82/94
	Compressor type			twin rotary	twin rotary	twin rotary
	Refrigerant type			R410A	R410A	R410A
	GWP			2088	2088	2088
	Refrigerant liquid pipe		mm	9.52	9.52	9.52
	Refrigerant gas pipe		mm	15.88	15.88	15.88
	Max pipe length		m	50	50	50
	Max drop between I.U.&O.U		m	30	30	30
	Refrigerant load in factory		kg	2.5	2.5	2.5
	Max pipe length (without charge refrigerant)		m	20	20	20
Working temp.	Additional charge		g/m	45	45	45
	Cooling(Min~Max)		°C	-15~50	-15~50	-15~50
	Heating(Min~Max)		°C	-20~24	-20~24	-20~24

MEPS COMPLIANT

EUROVENT CERTIFIED PERFORMANCE

ABH125K1ERG ABH140K1ERG

12.5kW,14kW

YR-HBS01

YR-E17

12.5kW,14kW

DC INVERTER 180° sine wave | DC motor | Sleep mode | Group control | Central control | BMS | On-Off card | Fresh air channel | Premium filter | Evaporator self-cleaning | Super quiet | Quiet operation | 360°airflow | Wide-angle airflow | 4 way independent air flow | Auto mode | AUTO Auto-swing | DRY DRY function | Super match | 24 hours timer | Auto restart | Smart defrosting | Child lock | Double 8 display | 4 fan settings | Drain water pump | Branch outlet | Quick installation | Built-in valve | 50 or 60 Hz Widely electricity Hz | -20°C heating | -15°C cooling | Self-diagnosis function | 3 min 3 minutes protection

Model			Indoor unit	ABH125K1ERG	ABH125K1ERG	ABH140K1ERG*	ABH140K1ERG
			Outoor unit	1UH125P1ERG	1UH125P1ERK	1UH140P1ERG*	1UH140P1ERK
Nominal performance data	Capacity	Nominal cooling	Btu/h	42600	42600	45700	45700
			kW (min-max)	12.5(3.5~14.5)	12.5(3.5~14.5)	13.4(3.5~15.5)	13.4(3.5~15.5)
		Nominal heating	Btu/h	44700	44700	51150	51150
			kW (min-max)	13.1(4~17)	13.1(4~17)	15.0(4.0~18.0)	15.0(4.0~18.0)
	Rated power input	Cooling	kW (min-max)	3.66(1.0~6.0)	3.66(1.0~6.0)	4.05(2.0~6.5)	4.05(2.0~6.5)
		Heating	kW (min-max)	3.54(1.0~6.0)	3.54(1.0~6.0)	4.15(2.0~7.0)	4.15(2.0~7.0)
	EER			3.41	3.41	3.31	3.31
	COP			3.7	3.7	3.61	3.61
Seasonal performance data	Cooling P design(35°C)		kW	/	/	/	/
	Heating P design(-10°C)		kW	/	/	/	/
	SEER/SCOP			/	/	/	/
	Energy class (Cooling/Heating)			A/A	A/A	A/A	A/A
	Annual energy consumption(Cooling)		kW	/	/	/	/
	Annual energy consumption(Heating)		kW	/	/	/	/
Indoor unit							
Elec. parameters	Power supply		Ph/V/Hz	1/220~240/50/60	1/220~240/50/60	1/220~240/50/60	1/220~240/50/60
Performance	Air flow(H/M/L)		m^3/h	1950/1600/1440/1200	1950/1600/1440/1200	1950/1600/1440/1200	1950/1600/1440/1200
	Sound power level(H/M/L)		dB(A)	64	64	64	64
	Sound pressure level(H/M/L)		dB(A)	47/44/38/34	47/44/38/34	47/44/38/34	47/44/38/34
Installation	External dimensions(W/D/H)		mm	840/840/288	840/840/288	840/840/288	840/840/288
	Shipping dimensions(W/D/H)		mm	990/990/380	990/990/380	990/990/380	990/990/380
	Net/Shipping weight		kg	32/38	32/38	32/38	32/38
	Wireless Controller		Optional	YR-HBS01	YR-HBS01	YR-HBS01	YR-HBS01
	Wired Controller		Optional	YR-E17	YR-E17	YR-E17	YR-E17
Panel	Panel Model			PB-950KB(standard panel) /PB-950MB(sensor panel)	PB-950KB(standard panel) /PB-950MB(sensor panel)	PB-950KB(standard panel) /PB-950MB(sensor panel)	PB-950KB(standard panel) /PB-950MB(sensor panel)
	External dimensions(W/D/H)		mm	950/950/50	950/950/50	950/950/50	950/950/50
	Shipping dimensions(W/D/H)		mm	1000/1000/110	1000/1000/110	1000/1000/110	1000/1000/110
	Net/Shipping weight		kg	6.5/9	6.5/9	6.5/9	6.5/9
Outdoor unit							
Elec. parameters	Power supply		Ph/V/Hz	1/220~240/50/60	3/380~415/50/60	1/220~240/50/60	3/380~415/50/60
Performance	Air flow (H)		m^3/h	6500	6500	7000	7000
	Sound power level		dB(A)	69	69	70	70
	Sound pressure level		dB(A)	52	52	53	53
Installation	External dimensions(W/D/H)		mm	1350/950/370	1350/950/370	1350/950/370	1350/950/370
	Shipping dimensions(W/D/H)		mm	1500/1090/480	1500/1090/480	1500/1090/480	1500/1090/480
	Net/Shipping weight		kg	105/118	108/121	105/118	108/121
	Compressor type			twin rotary	twin rotary	twin rotary	twin rotary
	Refrigerant type			R410A	R410A	R410A	R410A
	GWP			2088	2088	2088	2088
	Refrigerant liquid pipe		mm	9.52	9.52	9.52	9.52
	Refrigerant gas pipe		mm	15.88	15.88	15.88	15.88
	Max pipe length		m	75	75	75	75
	Max drop between I.U.&O.U		m	30	30	30	30
	Refrigerant load in factory		kg	3.7	3.7	3.7	3.7
	Max pipe length (without charge refrigerant)		m	30	30	30	30
Working temp.	Additional charge		g/m	45	45	45	45
	Cooling(Min~Max)		°C	-15~50	-15~50	-15~50	-15~50
	Heating(Min~Max)		°C	-20~24	-20~24	-20~24	-20~24

*** Data is pending**

MEDIUM ESP DUCT

High Efficiency

DC fan motor

Haier duct adopts DC fan motor, compared to conventional AC fan motor, DC fan motor is more efficiency.

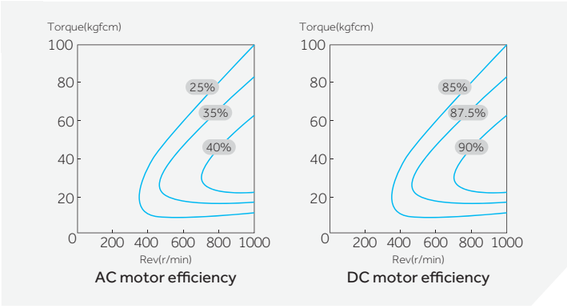

Comfortable

Consistent airflow

The indoor units contain up to 3 fans which can provide consistent airflow in different ESP enhancing the comfort.

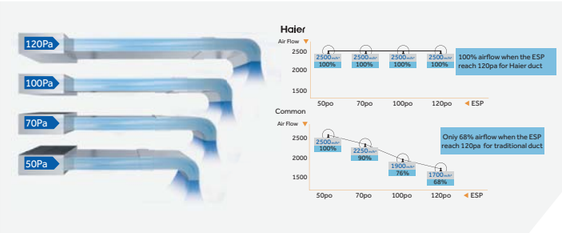

Low sound level

The 10-14kW duct unit design with wide air inlet and wide air outlet, 3 fan design lower the rotation speed, greatly reduce the sound level,10kW duct unit reach 55dB(A) sound power level.

Note: sound power data in Eurovent

Flexible Design

Super slim

250mm of thickness for better installation application flexibility (for 7.1kW-14kW).

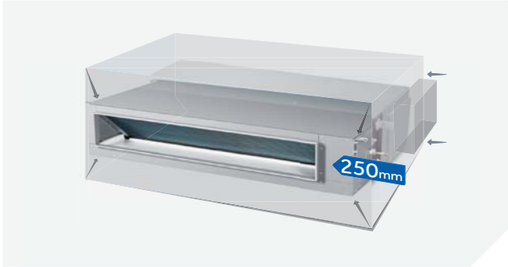

High lift-up drain pump

It can lift condensed water up to 1000mm, which make installation more flexible according to the layout.

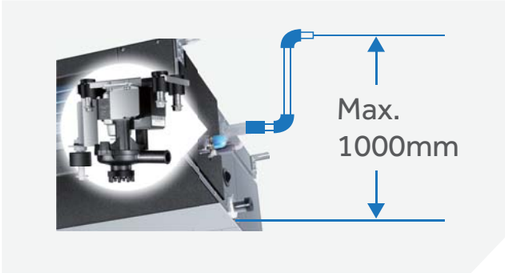

Return air choices

Friendly design: Rear air return or bottom air return is available.

Left or right drain outlet

Drain direction can be left or right according to the layout.

Adjustable E.S.P control

Because of the DC fan motor, the duct unit can adjust E.S.P :10/30/50/70Pa(7.1kW,8.2kW), 30~120Pa (10,12.5,14kW) by the wired controller, it can optimise air duct work installation, maintain airflow and sound levels as required.

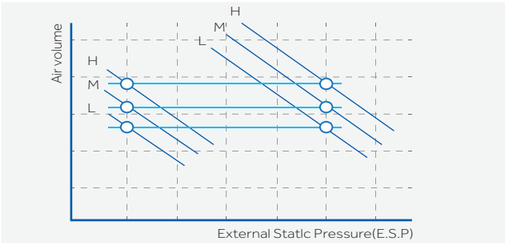

E.S.P setting(Pa)	30	40	50	60	70	80	90	100	110	120

MEDIUM ESP DUCT

MEPS COMPLIANT · EUROVENT CERTIFIED PERFORMANCE

ADH071M1ERG ADH090M1ERG

7.1kW 9.0kW

YR-E17 YR-HBS01

7.1kW 9.0kW

MEPS COMPLIANT · EUROVENT CERTIFIED PERFORMANCE

ADH105M1ERG ADH125M1ERG ADH140M1ERG

10kW 12.5kW,14kW

YR-E17 YR-HBS01

10kW, 12.5kW,14kW

DC INVERTER 180° sine wave · DC motor · A++ Energy class · Sleep mode · Group control · Central control · BMS · On-Off card · Fresh air channel · Premium filter · Evaporator self-cleaning · Super quiet · Quiet operation · Low noise · Auto mode · AUTO Auto-swing · DRY DRY function · Super match · 24 hours timer · Auto restart · Smart defrosting · Child lock · Adjustable E.S.P · Two-way drain · Drain water pump · Compact design · Built-in valve · 50 or 60 Hz Widely electricity Hz · -20°C heating · -15°C cooling · Self-diagnosis function · 3 min 3 minutes protection

Model	Standard Indoor unit (drain pump included)			ADH071M1ERG	ADH090M1ERG
	Optional Indoor unit (drain pump excluded)			ADH071M2ERG	ADH090M2ERG
	Outoor unit			1UH071N1ERG	1UH090N1ERG
Nominal performance data	Capacity	Nominal cooling	Btu/h	24200	29000
			kW (min-max)	7.1(2.0~9.0)	8.5(2.5~10)
		Nominal heating	Btu/h	27300	31700
			kW (min-max)	8(2~10.0)	9.5(2.5~11)
	Rated power input	Cooling	kW (min-max)	2.03(0.4~4.0)	2.50(0.5~4.4)
		Heating	kW (min-max)	2.0(0.4~4.0)	2.50(0.5~4.4)
	EER			3.5	3.4
	COP			4	3.8
Seasonal performance data	Cooling P design(35°C)		kW	7.1	8.5
	Heating P design(-10°C)		kW	6	7
	SEER/SCOP			6.3/4.2	6.1/4.1
	Energy class(Cooling/Heating)			A++/A+	A++/A+
	Annual energy consumption(Cooling)		kW	390	485
	Annual energy consumption(Heating)		kW	1882	2256
Indoor unit					
Elec. parameters	Power supply		Ph/V/Hz	1/220~240/50/60	1/220~240/50/60
Performance	Air flow(H/M/L)		m^3/h	1050/840/630	1300/900/700
	ESP(pa)			70/50/30 (default)/10	70/50/30 (default)/10
	Sound power level(H/M/L)		dB(A)	60	60
	Sound pressure level(H/M/L)		dB(A)	40/37/34	40/37/34
Installation	External dimensions(W/D/H)		mm	957/655/250	957/655/250
	Shipping dimensions(W/D/H)		mm	1170/860/340	1170/860/340
	Net/Shipping weight		kg	31.2/36.8	31.2/36.8
	Wired Controller		Optional	YR-E17	YR-E17
	Wireless Controller		Optional	YR-HBS01	YR-HBS01
Outdoor unit					
Elec. parameters	Power supply		Ph/V/Hz	1/220~240/50/60	1/220~240/50/60
Performance	Air flow (H)		m^3/h	3200	3500
	Sound power level		dB(A)	66	66
	Sound pressure level		dB(A)	49	50
Installation	External dimensions(W/D/H)		mm	965/950/370	965/950/370
	Shipping dimensions(W/D/H)		mm	1095/1050/450	1095/1050/450
	Net/Shipping weight		kg	80/92	80/92
	Compressor type			twin rotary	twin rotary
	Refrigerant type			R410A	R410A
	GWP			2088	2088
	Refrigerant liquid pipe		mm	9.52	9.52
	Refrigerant gas pipe		mm	15.88	15.88
	Max pipe length		m	50	50
	Max drop between I.U.&O.U		m	30	30
	Refrigerant load in factory		kg	2.5	2.5
	Max pipe length without charge refrigerant		m	20	20
	Refrigerant charge quantity for extra length		g/m	45	45
Working temp.	Cooling(Min~Max)		℃	-15~50	-15~50
	Heating(Min~Max)		℃	-20~24	-20~24

DC INVERTER 180° sine wave · DC motor · Sleep mode · Group control · Central control · BMS · On-Off card · Fresh air channel · Premium filter · Evaporator self-cleaning · Super quiet · Quiet operation · Far distance air supplying · Auto mode · AUTO Auto-swing · DRY DRY function · Super match · 24 hours timer · Auto restart · Smart defrosting · Child lock · Adjustable E.S.P · Two-way drain · Drain water pump · Compact design · Built-in valve · 50 or 60 Hz Widely electricity Hz · -20°C heating · -15°C cooling · Self-diagnosis function · 3 min 3 minutes protection

Model	Standard Indoor unit (drain pump included)			ADH105M1ERG	ADH125M1ERG	ADH125M1ERG	ADH140M1ERG*	ADH140M1ERG
	Optional Indoor unit (drain pump excluded)			ADH105M2ERG	ADH125M2ERG	ADH125M2ERG	ADH140M2ERG*	ADH140M2ERG
	Outoor unit			1UH105N1ERG	1UH125P1ERG	1UH125P1ERK	1UH140P1ERG*	1UH140P1ERK
Nominal performance data	Capacity	Nominal cooling	Btu/h	34100	42650	42650	45700	45700
			kW (min-max)	10(2.5~11)	12.5(3.5~15.0)	12.5(3.5~15.0)	13.4(3.5~16.0)	13.4(3.5~16.0)
		Nominal heating	Btu/h	35500	47750	47750	52850	52850
			kW (min-max)	10.4(2.5~12)	14(4~18.0)	14(4~18.0)	15.5(4.0~19.0)	15.5(4.0~19.0)
	Rated power input	Cooling	kW (min-max)	2.93(0.5~4.5)	3.66(1.0~6.5)	3.66(1.0~6.5)	4.05(1.0~6.5)	4.05(1.0~6.5)
		Heating	kW (min-max)	2.80(0.5~4.5)	3.78(1.0~6.5)	3.78(1.0~6.5)	4.18(1.2~6.5)	4.18(1.2~6.5)
	EER			3.41	3.41	3.41	3.31	3.31
	COP			3.71	3.7	3.7	3.73	3.73
Seasonal performance data	Cooling P design(35°C)		kW	10	/	/	/	/
	Heating P design(-10°C)		kW	9.8	/	/	/	/
	SEER/SCOP			6.5/4	/	/	/	/
	Energy class(Cooling/Heating)			A++/A+	A/A	A/A	A/A	A/A
	Annual energy consumption(Cooling)		kW	541	/	/	/	/
	Annual energy consumption(Heating)		kW	3534	/	/	/	/
Indoor unit								
Elec. parameters	Power supply		Ph/V/Hz	1/220~240/50/60	1/220~240/50/60	1/220~240/50/60	1/220~240/50/60	1/220~240/50/60
Performance	Air flow(H/M/L)		m^3/h	2000/1740/1380/1280	2250/1960/1680/1500	2250/1960/1680/1500	2500/2160/1780/1500	2500/2160/1780/1500
	ESP(pa)			30~120	30~120	30~120	30~120	30~120
	Sound power level(H/M/L)		dB(A)	55	62	62	64	64
	Sound pressure level(H/M/L)		dB(A)	32/28/25/23	39/36/33/31	39/36/33/31	41/36/33/31	41/36/33/31
Installation	External dimensions(W/D/H)		mm	1500/700/250	1500/700/250	1500/700/250	1500/720/250	1500/720/250
	Shipping dimensions(W/D/H)		mm	1710/865/320	1710/865/320	1710/865/320	1620/860/340	1620/860/340
	Net/Shipping weight		kg	49/61	52/63	52/63	52/63	52/63
	Wired Controller		Optional	YR-E17	YR-E17	YR-E17	YR-E17	YR-E17
	Wireless Controller		Optional	YR-HBS01	YR-HBS01	YR-HBS01	YR-HBS01	YR-HBS01
Outdoor unit								
Elec. parameters	Power supply		Ph/V/Hz	1/220~240/50/60	1/220~240/50/60	3/380~415/50/60	1/220~240/50/60	3/380~415/50/60
Performance	Air flow (H)		m^3/h	4000	6500	6500	7000	7000
	Sound power level		dB(A)	68	69	69	70	70
	Sound pressure level		dB(A)	52	52	52	53	53
Installation	External dimensions(W/D/H)		mm	965/950/370	1350/950/370	1350/950/370	1350/950/370	1350/950/370
	Shipping dimensions(W/D/H)		mm	1095/1050/450	1500/1090/480	1500/1090/480	1500/1090/480	1500/1090/480
	Net/Shipping weight		kg	82/94	105/118	108/121	105/118	108/121
	Compressor type			twin rotary	twin rotary	twin rotary	twin rotary	twin rotary
	Refrigerant type			R410A	R410A	R410A	R410A	R410A
	GWP			2088	2088	2088	2088	2088
	Refrigerant liquid pipe		mm	9.52	9.52	9.52	9.52	9.52
	Refrigerant gas pipe		mm	15.88	15.88	15.88	15.88	15.88
	Max pipe length		m	50	75	75	75	75
	Max drop between I.U.&O.U		m	30	30	30	30	30
	Refrigerant load in factory		kg	2.5	3.7	3.7	3.7	3.7
	Max pipe length without charge refrigerant		m	20	30	30	30	30
	Refrigerant charge quantity for extra length		g/m	45	45	45	45	45
Working temp.	Cooling(Min~Max)		℃	-15~50	-15~50	-15~50	-15~50	-15~50
	Heating(Min~Max)		℃	-20~24	-20~24	-20~24	-20~24	-20~24

* Data is pending

HIGH ESP DUCT

Design Flexibility

Super high airflow

New DC fan motor and large length & diameter fan design ,provide the 2880 m³/h (800l/s) above air flow with 250m³/h/kW (70L/s/kW) ,which is 44% more than medium ESP duct unit.

Capacity	Medium ESP duct airflow(m³/h)	High ESP duct airflow(m³/h)	Promotion
10.0kW	2000	2880	44%
12.5kW	2250	3250	44%
14.0kW	2500	3600	44%

210Pa ESP setting

210pa ESP give the design flexibility totally , it can meet difficulty duct requirement.

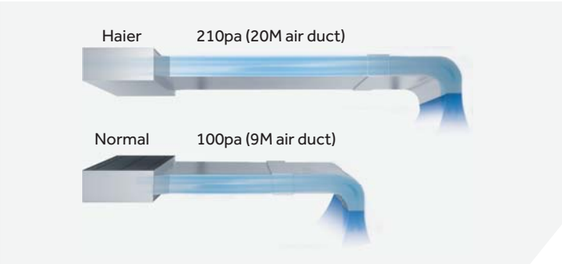

Easy Installation

Narrow width

Only 490mm depth can meet the Australia compact roof trusses, easy for installer lifting the unit.

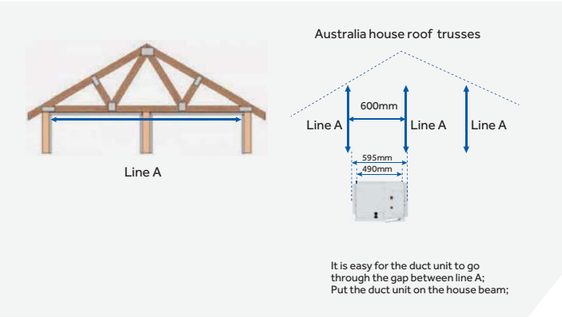

Easy Installation

Three side open the panel

There are three side panel which can be opened for easy maintenance

Top panel and bottom panel can be opened to maintain the fan and motor;

Electrical panel can be opened to maintain the electrical parts;

Side panel can be opened to maintain the pipe sensor;

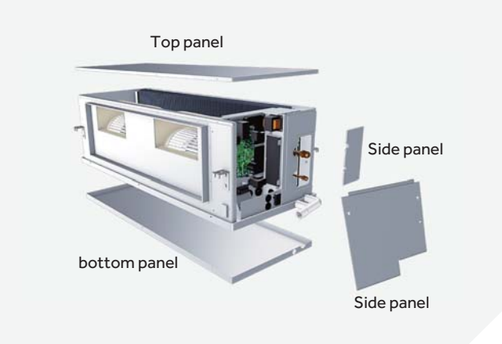

Dedicated place to fix the wifi

There are dedicated place to fix the wifi, so installer can make easy work when fixing the wifi ;

10 step adjusted ESP

ESP can be adjusted by wired controller YR-E16A/ YR-E16B / YR-E17, installer don´t need to install the static box, save installation time;

Energy Efficiency

High efficiency design

We use DC fan motor and wide fin more rows heat exchanger, which can provide EER >3.4 for all high ESP duct combinations.

Capacity	EER	COP
10.0kW	3.5	3.7
12.5kW	3.5	3.6
14.0kW	3.4	3.6

Comfort & Convenience

Multi air speed for comfort

There are 4 speed airflow : super low/low/medium/high to choose for comfort.

There are also turbo mode with super high speed for quick cooling/heating.

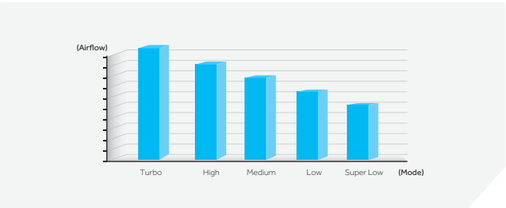

Wifi control

Besides normal wired/wireless control , Haier supply wifi control solution. Download the "smart air 2" app in IOS or android version ,you will have a remote control freely when you are out of home ,including weekly timer.

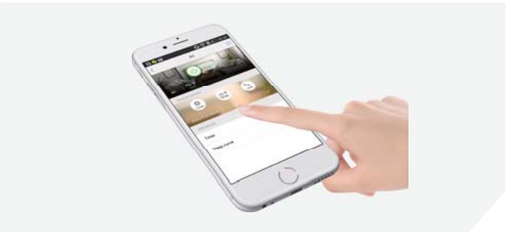

HIGH ESP DUCT

MEPS COMPLIANT

EUROVENT CERTIFIED PERFORMANCE

ADH105H1ERG

10.0kW

YR-HBS01

YR-E17

10.0kW

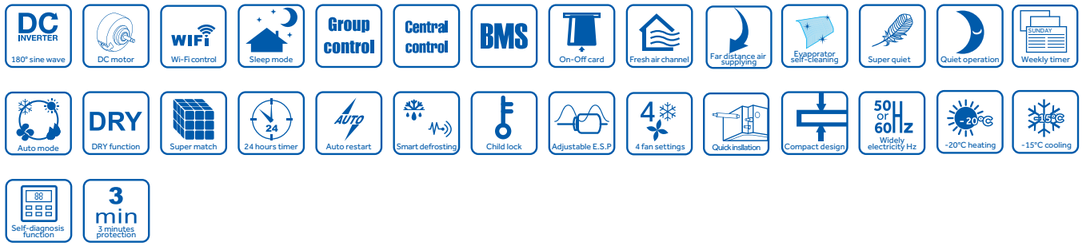

Model	Standard Indoor unit			ADH105H1ERG
	Outoor unit			1UH105N1ERG
Nominal performance data	Capacity	Nominal cooling	Btu/h	35800
			kW (min-max)	10.5(2.5~11.0)
		Nominal heating	Btu/h	39200
			kW (min-max)	11.5(2.5~12.0)
	Rated power input	Cooling	kW (min-max)	3.00(0.5~5.3)
		Heating	kW (min-max)	3.10(0.5~5.3)
	EER			3.5
	COP			3.7
	Energy class(Cooling/Heating)			A/A
Indoor unit				
Elec. parameters	Power supply		Ph/V/Hz	1/220~240/50/60
Performance	Air flow(H/M/L)		m^3/h	2880/2380/1880/1380
			l/s	800
	ESP		Pa	37~210
	Sound power level(H/M/L)		dB(A)	60
	Sound pressure level(H/M/L)		dB(A)	45/41/37/33
Installation	External dimensions(W/D/H)		mm	1350/490/425
	Shipping dimensions(W/D/H)		mm	1565/724/510
	Net/Shipping weight		kg	59/70
	Wired Controller		Optional	YR-E17
	Wireless Controller		Optional	YR-HBS01
Outdoor unit				
Elec. parameters	Power supply		Ph/V/Hz	1/220~240/50/60
Performance	Air flow (H)		m^3/h	4000
	Sound power level		dB(A)	66
	Sound pressure level		dB(A)	49
Installation	External dimensions(W/D/H)		mm	965/950/370
	Shipping dimensions(W/D/H)		mm	1095/1050/450
	Net/Shipping weight		kg	82/94
	Compressor type			twin rotary
	Refrigerant type			R410A
	GWP			2088
	Refrigerant liquid pipe		mm	9.52
	Refrigerant gas pipe		mm	15.88
	Max pipe length		m	50
	Max drop between I.U.&O.U		m	30
	Refrigerant load in factory		kg	2.5
	Max pipe length without charge refrigerant		m	20
	Refrigerant charge quantity for extra length		g/m	45
Working temp.	Cooling(Min~Max)		°C	-15~50
	Heating(Min~Max)		°C	-20~24

MEPS COMPLIANT

EUROVENT CERTIFIED PERFORMANCE

ADH125H1ERG ADH140H1ERG

12.5kW,14kW

YR-HBS01

YR-E17

12.5kW,14kW

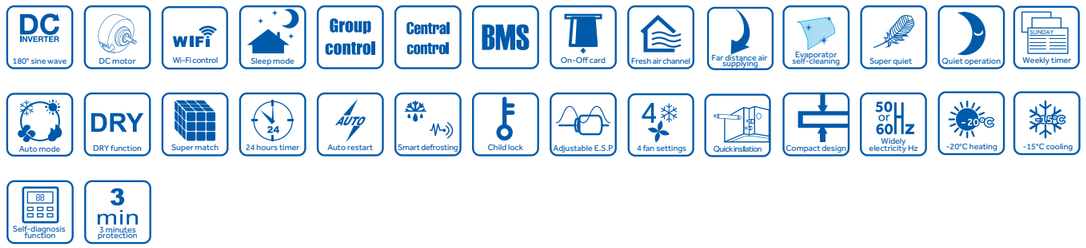

Model	Standard Indoor unit			ADH125H1ERG	ADH125H1ERG	ADH140H1ERG	ADH140H1ERG
	Outoor unit			1UH125P1ERG	1UH125P1ERK	1UH140P1ERG	1UH140P1ERK
Nominal performance data	Capacity	Nominal cooling	Btu/h	42650	42650	47750	47750
			kW (min-max)	12.5(3.5~15.0)	12.5(3.5~15.0)	14(3.5~15.0)	14(3.5~15.0)
		Nominal heating	Btu/h	47750	47750	54600	54600
			kW (min-max)	14.0(4~18.0)	14.0(4~18.0)	16(6.0~19.0)	16(6.0~19.0)
	Rated power input	Cooling	kW (min-max)	3.57(1.0~6.5)	3.57(1.0~6.5)	4.11(2.0~7.2)	4.11(2.0~7.2)
		Heating	kW (min-max)	3.88(1.0~6.5)	3.88(1.0~6.5)	4.44(2.0~7.2)	4.44(2.0~7.2)
	EER			3.5	3.5	3.4	3.4
	COP			3.6	3.6	3.6	3.6
	Energy class(Cooling/Heating)			A/A	A/A	A/A	A/A
Indoor unit							
Elec. parameters	Power supply		Ph/V/Hz	1/220~240/50/60	1/220~240/50/60	1/220~240/50/60	1/220~240/50/60
Performance	Air flow(H/M/L)		m^3/h	3250/2750/2250/1750	3250/2750/2250/1750	3600/3100/2600/2100	3600/3100/2600/2100
			l/s	903	903	1000	1000
	ESP		Pa	37~210	37~210	37~210	37~210
	Sound power level(H/M/L)		dB(A)	62	62	64	64
	Sound pressure level(H/M/L)		dB(A)	47/44/42/39	47/44/42/39	49/46/43/40	49/46/43/40
Installation	External dimensions(W/D/H)		mm	1350/490/425	1350/490/425	1350/490/425	1350/490/425
	Shipping dimensions(W/D/H)		mm	1565/724/510	1565/724/510	1565/724/510	1565/724/510
	Net/Shipping weight		kg	61/72	61/72	61/72	61/72
	Wired Controller		Optional	YR-E17	YR-E17	YR-E17	YR-E17
	Wireless Controller		Optional	YR-HBS01	YR-HBS01	YR-HBS01	YR-HBS01
Outdoor unit							
Elec. parameters	Power supply		Ph/V/Hz	1/220~240/50/60	3/380~415/50/60	1/220~240/50/60	3/380~415/50/60
Performance	Air flow (H)		m^3/h	6500	6500	7000	7000
	Sound power level		dB(A)	67	69	70	70
	Sound pressure level		dB(A)	51	52	53	53
Installation	External dimensions(W/D/H)		mm	1350/950/370	1350/950/370	1350/950/370	1350/950/370
	Shipping dimensions(W/D/H)		mm	1500/1090/480	1500/1090/480	1500/1090/480	1500/1090/480
	Net/Shipping weight		kg	105/118	108/121	105/118	108/121
	Compressor type			twin rotary	twin rotary	twin rotary	twin rotary
	Refrigerant type			R410A	R410A	R410A	R410A
	GWP			2088	2088	2088	2088
	Refrigerant liquid pipe		mm	9.52	9.52	9.52	9.52
	Refrigerant gas pipe		mm	15.88	15.88	15.88	15.88
	Max pipe length		m	75	75	75	75
	Max drop between I.U.&O.U		m	30	30	30	30
	Refrigerant load in factory		kg	3.7	3.7	3.7	3.7
	Max pipe length without charge refrigerant		m	30	30	30	30
	Refrigerant charge quantity for extra length		g/m	45	45	45	45
Working temp.	Cooling(Min~Max)		°C	-15~50	-15~50	-15~50	-15~50
	Heating(Min~Max)		°C	-20~24	-20~24	-20~24	-20~24

SUPER MATCH
CLASSIC POWER

| 27 Models Line-up
| 29 Benefits
| 33 Key Feature
| 37 Cassette Type
| 43 Convertible Type
| 49 Duct Type
| 51 Slim Low ESP Duct
| 53 Low ESP Duct
| 54 Medium ESP Duct
| 56 High ESP Duct
| 57 Cabinet Type

MODELS LINE-UP

EUROVENT CERTIFIED PERFORMANCE

Btu/h	12000	18000	24000		28000	36000	48000	60000
kW	3.6	5.2	7.0		8.2	10.5	12.5	14.0/16.0
Universal outdoor unit	1U12BS3ERA	1U18FS2ERA(S)	NEW 1U24GS1ERA		1U28GS2ERA(S)	NEW 1U36HS1ERA(S)	NEW 1U48LS1ERA(S) 1U48LS1ERB(S)	NEW 1U60IS2ERB(S) 1U60IS1ERB(S)
Cassette type	AB12CS2ERA(S)	AB18CS2ERA(S)	AB24ES1ERA(S)		AB28ES1ERA(S)	AB36ES1ERA(S)	AB48ES1ERA(S)	AB60ES2ERA(S) AB60CS1ERA(S)
Convertible type	AC12CS1ERA(S)	AC18CS1ERA(S)	AC24CS1ERA(S)		AC28ES1ERA(S)	AC36ES1ERA(S)	AC48FS1ERA(S)	AC60FS1ERA(S)
Low ESP duct type 25Pa	AD12LS1ERA	AD18LS1ERA	AD24LS1ERA					
Slim low ESP duct type 30Pa	AD12SS1ERA(N)	AD18SS1ERA(N)	AD24SS1ERA(N)					
Medium ESP duct type 70/100Pa	AD12MS1ERA	AD18MS1ERA	AD24MS2ERA		AD28MS2ERA(S)	AD36NS1ERA(S)	AD48NS1ERA(S)	
High ESP duct type 150Pa							AD48HS1ERA(S)	AD60HS1ERA(S)
Cabinet type							AP48DS1ERA(S) AP48KS1ERA(S)	AP60KS1ERA(S)

BENEFITS

SuperMatch

SERIES	MODEL	ENERGY SAVING				SMART							HEALTH		COMFORT												
		DC INVERTER 180° sine wave DC inverter	DC motor	A++ Energy class A++	Sleep mode	WIFI Wi-Fi control	Group control Group controller	Central control Central control	BMS BMS	On-Off card	Move eye intelligent system	Fresh air channel		Premium filter	Evaporator self-cleaning	Super quiet	Quiet operation	Low noise	Left & Right airflow	Far distance air supplying	360°airflow	4-way airflow	3D auto airflow	Wide-angle airflow	4 way independent airflow	Auto mode	AUTO Auto-swing	DRY DRY function
Cassette type	AB12CS2ERA(S)	√	√		√	√	√	√	√	√		√		√	√		√					√				√	√	√
	AB18CS2ERA(S)	√	√		√	√	√	√	√	√		√		√	√		√					√				√	√	√
	AB24ES1ERA(S)	√		√	√	√	√	√	√	√				√	√		√					√				√	√	√
	AB28ES1ERA(S)	√			√	√	√	√	√	√				√	√		√					√				√	√	√
	AB36ES1ERA(S)	√			√	√	√	√	√	√		√		√	√		√					√				√	√	√
	AB48ES1ERA(S)	√			√	√	√	√	√	√		√		√	√		√					√				√	√	√
	AB60ES2ERA(S)	√			√	√	√	√	√	√		√		√	√		√					√				√	√	√
Convertible type	AC12CS1ERA(S)	√		√	√	√	√	√	√	√				√	√		√		√				√			√	√	√
	AC18CS1ERA(S)	√			√	√	√	√	√	√				√	√		√		√				√			√	√	√
	AC24CS1ERA(S)	√			√	√	√	√	√	√				√	√		√		√				√			√	√	√
	AC28ES1ERA(S)	√			√	√	√	√	√	√		√		√	√		√		√				√	√		√	√	√
	AC36ES1ERA(S)	√			√	√	√	√	√	√		√		√	√		√		√				√	√		√	√	√
	AC48FS1ERA (S)	√			√	√	√	√	√	√		√		√	√		√		√				√	√		√	√	√
	AC60FS1ERA(S)	√			√	√	√	√	√	√		√		√	√		√		√				√	√		√	√	√
Slim duct type	AD12SS1ERA(N)	√	√		√	√	√	√	√	√				√	√	√	√		√				√			√	√	√
	AD18SS1ERA(N)	√	√		√	√	√	√	√	√				√	√	√	√		√				√			√	√	√
	AD24SS1ERA(N)	√	√		√	√	√	√	√	√				√	√	√	√		√				√			√	√	√
Low ESP duct type	AD12LS1ERA	√			√	√	√	√	√	√				√	√		√									√	√	√
	AD18LS1ERA	√			√	√	√	√	√	√				√	√		√									√	√	√
	AD24LS1ERA	√			√	√	√	√	√	√				√	√	√	√									√	√	√
Medium ESP duct type	AD12MS1ERA	√	√	√	√	√	√	√	√	√		√		√	√	√	√									√	√	√
	AD18MS1ERA	√	√	√	√	√	√	√	√	√		√		√	√	√	√									√	√	√
	AD24MS2ERA	√	√	√	√	√	√	√	√	√		√		√	√	√	√									√	√	√
	AD28MS2ERA(S)	√	√		√	√	√	√	√	√		√		√	√		√									√	√	√
	AD36NS1ERA(S)	√			√	√	√	√	√	√				√	√		√									√	√	√
	AD48NS1ERA(S)	√			√	√	√	√	√	√				√	√		√									√	√	√
High ESP duct type	AD48HS1ERA(S)	√			√	√	√	√	√	√				√	√		√			√						√	√	√
	AD60HS1ERA(S)	√			√	√	√	√	√	√				√	√		√			√						√	√	√
Cabinet type	AP48DS1ERA(S)	√			√	√	√	√	√	√				√	√		√		√	√			√			√	√	√
	AP48KS1ERA(S)	√			√	√	√	√	√	√				√	√		√		√	√			√			√	√	√
	AP60KS1ERA(S)	√			√	√	√	√	√	√				√	√		√		√	√			√			√	√	√

√ : Standard √ : Optional

BENEFITS

SuperMatch

SERIES	MODEL	CONVENIENCE										CONVENIENCE							RELIABILITY					
		Super match	Weekly timer	24 hours timer	Auto restart	Smart defrosting	Child lock	Double 8 display	4 fan settings	Adjustable E.S.P		Two-way drain	Drain water pump	Branch outlet	Quick installation	Compact design	Built-in valve	Widely electricity Hz	-15°C heating	-20°C heating	-10°C cooling	-15°C cooling	Self-diagnosis function	3 minutes protection
Cassette type	AB12CS2ERA(S)	√	√	√	√	√	√		√				√			√		√	√		√		√	√
	AB18CS2ERA(S)	√	√	√	√	√	√		√				√			√		√	√		√		√	√
	AB24ES1ERA(S)	√	√	√	√	√	√						√	√		√		√	√		√		√	√
	AB28ES1ERA(S)	√	√	√	√	√	√						√	√		√		√	√		√		√	√
	AB36ES1ERA(S)	√	√	√	√	√	√						√	√				√	√		√		√	√
	AB48ES1ERA(S)	√	√	√	√	√	√						√	√				√	√		√		√	√
	AB60ES2ERA(S)	√	√	√	√	√	√						√	√				√	√				√	√
Convertible type	AC12CS1ERA(S)	√	√	√	√	√	√									√		√	√		√		√	√
	AC18CS1ERA(S)	√	√	√	√	√	√									√		√	√		√		√	√
	AC24CS1ERA(S)	√	√	√	√	√	√									√		√	√		√		√	√
	AC28ES1ERA(S)	√	√	√	√	√	√											√	√		√		√	√
	AC36ES1ERA(S)	√	√	√	√	√	√											√	√		√		√	√
	AC48FS1ERA (S)	√	√	√	√	√	√											√	√		√		√	√
	AC60FS1ERA(S)	√	√	√	√	√	√											√	√				√	√
Slim duct type	AD12SS1ERA(N)	√	√	√	√	√	√			√		√	√			√		√	√		√		√	√
	AD18SS1ERA(N)	√	√	√	√	√	√			√		√	√			√		√	√		√		√	√
	AD24SS1ERA(N)	√	√	√	√	√	√			√		√	√			√		√	√		√		√	√
Low ESP duct type	AD12LS1ERA	√	√	√	√	√	√					√						√	√		√		√	√
	AD18LS1ERA	√	√	√	√	√	√					√						√	√		√		√	√
	AD24LS1ERA	√	√	√	√	√	√					√						√	√		√		√	√
Medium ESP duct type	AD12MS1ERA	√	√	√	√	√	√			√		√	√			√		√	√		√		√	√
	AD18MS1ERA	√	√	√	√	√	√			√		√	√			√		√	√		√		√	√
	AD24MS2ERA	√	√	√	√	√	√			√		√	√			√		√	√		√		√	√
	AD28MS2ERA(S)	√	√	√	√	√	√			√		√	√			√		√	√		√		√	√
	AD36NS1ERA(S)	√	√	√	√	√	√					√						√	√		√		√	√
	AD48NS1ERA(S)	√	√	√	√	√	√					√						√	√		√		√	√
High ESP duct type	AD48HS1ERA(S)	√	√	√	√	√	√											√	√		√		√	√
	AD60HS1ERA(S)	√	√	√	√	√	√											√	√				√	√
Cabinet type	AP48DS1ERA(S)	√	√	√	√	√	√	√											√		√		√	√
	AP48KS1ERA(S)	√	√	√	√	√	√	√											√		√		√	√
	AP60KS1ERA(S)	√	√	√	√	√	√	√											√				√	√

√ : Standard √ : Optional

KEY FEATURE

DC Inverter Technology

Powerful startup

Haier DC inverter system can startup and running at maximum frequency very quickly in order to reach the set temperature in the shortest time, which brings you great comfort experience.

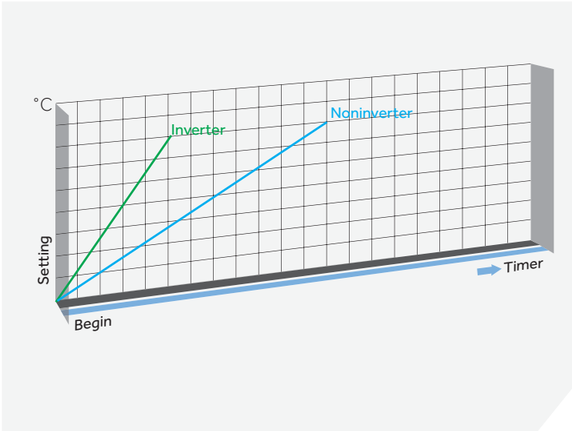

Comfort

Haier DC inverter system will reduce the frequency and running smoothly according to the real load request after reach the set temperature. The temperature tolerance will be within ±1 °C, bring end user real comfort.

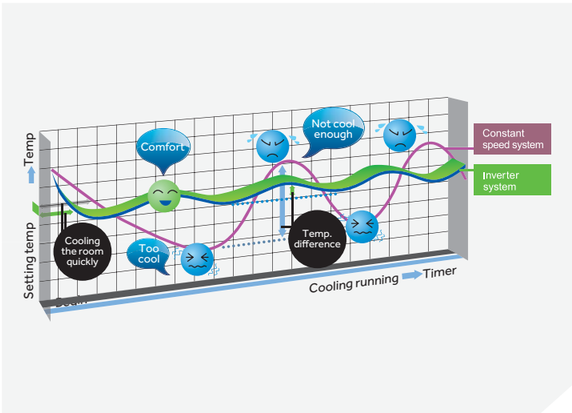

Stock Friendly

Easy stock

Outdoor units are universal outdoor units for all indoor unit combination.

Indoor units are universal indoor units for single split combination or maxi split combination or multi split combination

Energy Efficiency

Eurovent standard

In accompliance with the 2013 EU Regulation No 206/2012 for SEER/SCOP and sound power level requirement, models reaching A/A with 5.1/3.8 SEER/SCOP.

EUROVENT CERTIFIED PERFORMANCE

Installation Friendly

Easy start up & maintenance

In start up & maintenance, PC monitor can connect to outdoor unit by TD-02, read all indoor unit & outdoor unit running parameter, also with the function to show parameter & curve.

When malfunction happen, show failure code.

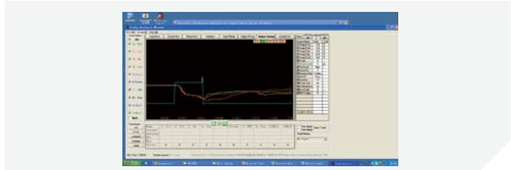

User Friendly

Easy control

The universal wireless controller for high wall, console, cassette,convertible, duct.

Separate cool, heat, dry, quiet buttons easy to use !

Wider Operation Range

Low temp. cooling or heating

Haier DC inverter system provide much wider working range that is suitable for special cooling,heating requirement.

Default production working range:Cooling:-10°C~46°C Heating:-15°C~24°C

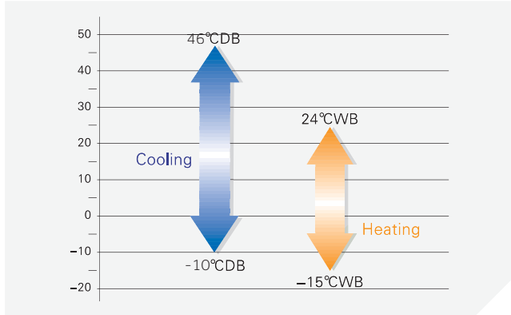

KEY FEATURE

-25 degree low ambient cooling solution

Low ambient cooling kit-compressor heating belt

In low ambient environment , the compressor oil will become viscous ; We need to use the compressor heating belt to improve the compressor oil activity, then to make the stable start up in low ambient ;

Low ambient cooling programme

When the unit starts , the outside fan speed will be set according to outside ambient temperature. After operation in a period of time, then according to the outdoor coil temperature to adjust the fan speed ;

-25 degree low ambient cooling solution

Work in rotation function

We have accessory YCJ-A002 , this accessory have rotation function which is perfect for low ambient cooling requirement;

Two sets unit can work in rotation , the rotation choice is 8/10/12/24 hours , 12 hours as default . This function avoid working long time for single unit , increase the life time for the units , even when one unit is in malfunction , the other unit will continue to work until the maintenance staff arrives ;

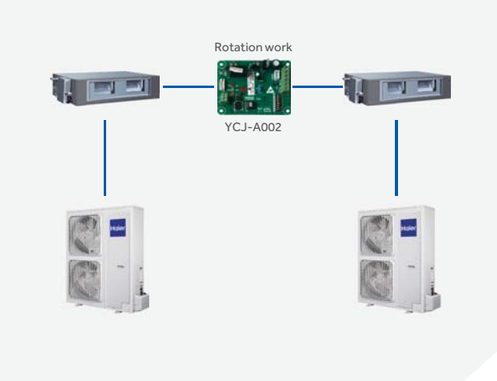

Wifi control

We have wifi control function , we can use the wifi to remote control the unit, even the malfunction happens, the malfunction signal can be sent to the mobile phone for quick maintenance;

CASSETTE TYPE

High Efficiency

DC fan motor

Haier cassette adopts DC fan motor, compared to conventional AC fan motor, DC fan motor is more efficiency.
*For models AB12/AB18

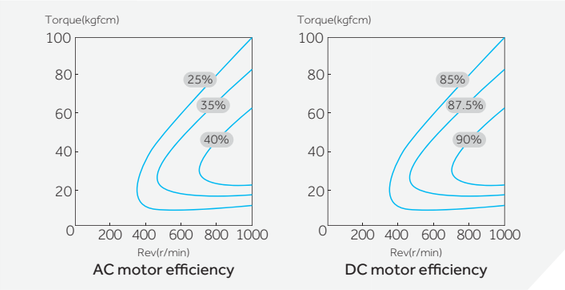

Compact Size

Compact design

The unit dimension is 570mm x 570mm x 260mm for easy installation. It is universal and harmonious with standard ceiling 600mm x 600mm, which avoids the breakage for ceiling during installation.

Compact design

Adopt compact design,the thickness of the main body is only 240mm. Even if the inner space of ceiling is narrow, the unit can also be installed easily.

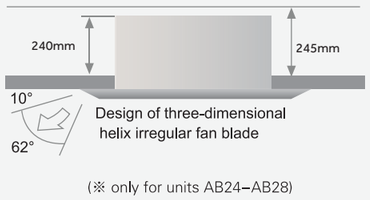

More Solution

Branch outlet

It is possible to use 1 or 2 branches for better air distribution(optinal).

Easy Installation & Maintenance

Built-in high head drain pump

A standard drain-head height up to 1000mm is possible. Creat the ideal solution for perfect water drainage.

Easy access electrical box design

The electrical box is located in the unit, you can just make maintenance by openning the panel .

Comfort

Quiet operation

The fan blade adopts the design of irregular helix, the indoor unit can run at the lowest sound level.

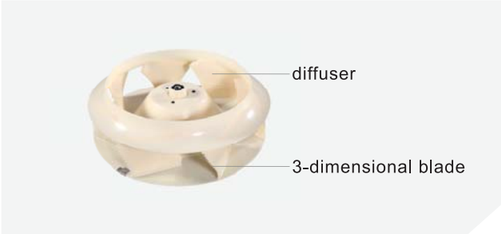

Fresh air inlet

Pre-set fresh air inlet can introduce the outside fresh air into the room, which can greatly improve the indoor air quality & keep people away from "air conditioner symptom".

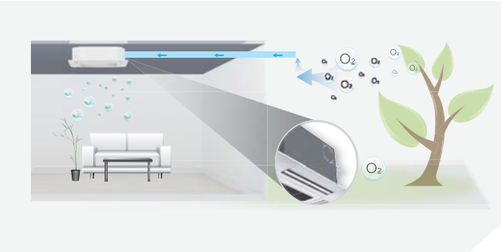

Convenient

Convenience swing control

Memory function in swing direction make the flap come to the direction when the cassette unit is turned on again.

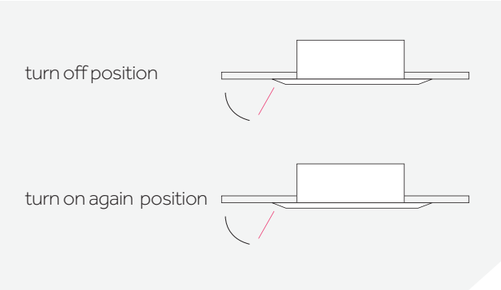

CASSETTE TYPE

EUROVENT CERTIFIED PERFORMANCE

AB12CS2ERA(S) **AB18CS2ERA(S)**

12,18K

YR-HD

12K

18K

DC INVERTER 180° sine wave · DC motor · Sleep mode · Group control · Central control · BMS · On-Off card · Fresh air channel · Premium filter · Evaporator self-cleaning · Quiet operation · 4-way airflow · Auto mode · AUTO Auto-swing

DRY DRY function · Super match · 24 hours timer · Auto restart · Smart defrosting · Child lock · 4 fan settings · Drain water pump · Compact design · 50 or 60 Hz Widely electricity Hz · -15°C heating · -10°C cooling · Self-diagnosis function · 3 min 3 minutes protection

EUROVENT CERTIFIED PERFORMANCE

AB24ES1ERA(S) **AB28ES1ERA(S)**

24,28K

YR-HD

24,28K

DC INVERTER 180° sine wave · A++ Energy class · Sleep mode · Group control · Central control · BMS · On-Off card · Premium filter · Evaporator self-cleaning · Quiet operation · 4-way airflow · Auto mode · AUTO Auto-swing · DRY DRY function

Super match · 24 hours timer · Auto restart · Smart defrosting · Child lock · Drain water pump · Branch outlet · Compact design · 50 or 60 Hz Widely electricity Hz · -15°C heating · -10°C cooling · Self-diagnosis function · 3 min 3 minutes protection

Model			Indoor unit	AB12CS2ERA(S)	AB18CS2ERA(S)
			Outoor unit	1U12BS3ERA	1U18FS2ERA(S)
Nominal performance data	Capacity	Nominal cooling	Btu/h	12000	17000
			kW (min-max)	3.50(0.9~4.5)	5.0(1.8~5.8)
		Nominal heating	Btu/h	12600	18800
			kW (min-max)	3.7(1~4.8)	5.2(2~6.5)
	Rated power input	Cooling	kW (min-max)	1.06(0.28~1.8)	1.53(0.55~2)
		Heating	kW (min-max)	0.99(0.28~1.8)	1.52(0.6~2)
	EER/COP			3.31/3.71	3.26/3.42
Seasonal performance data	Cooling P design(35℃)		kW	3.5	5
	Heating P design(-10℃)		kW	3.4	4.7
	SEER/SCOP			6.1/3.8	5.1/3.8
	Energy class（Cooling/Heating）			A++/A	A/A
	Annual energy consumption(Cooling)		kW	222	363
	Annual energy consumption(Heating)		kW	1427	1932
Indoor unit					
Electrical parameters	Power supply		Ph/V/Hz	1/220~230/50/60	1/220~230/50/60
Performance	Air flow（H/M/L）		m^3/h	620/520/450/350	700/620/500/400
	Sound power level（H/M/L）		dB(A)	52	57
	Sound pressure level(H/M/L)		dB(A)	35/31/27/23	40/35/33/29
Installation	External dimensions(W/D/H)		mm	570/570/260	570/570/260
	Shipping dimensions(W/D/H)		mm	718/680/380	718/680/380
	Net/Shipping weight		kg	18.5/22	18.5/22
	Controller		Standard	YR-HD	YR-HD
			Option	Please refer to control system in page 127	
Panel	Panel Model			PB-700IB	PB-700IB
	External dimensions(W/D/H)		mm	700/700/60	700/700/60
	Shipping dimensions(W/D/H)		mm	740/750/115	740/750/115
	Net/Shipping weight		kg	2.8/4.8	2.8/4.8
Outdoor unit					
Electrical parameters	Power supply		Ph/V/Hz	1/230/50	1/230/50
Performance	Air flow (H)		m^3/h	1700	2200
	Sound power level		dB(A)	62/63	63/64
	Sound pressure level		dB(A)	52/53	53/54
Installation	External dimensions(W/D/H)		mm	780/245/540	810/288/688
	Shipping dimensions(W/D/H)		mm	930/340/614	949/406/745
	Net/Shipping weight		kg	32.5/35.5	43/45.5
	Compressor type			Rotary	Rotary
	Refrigerant type			R410A	R410A
	GWP			2088	2088
	Refrigerant liquid pipe		mm	6.35	6.35
	Refrigerant gas pipe		mm	9.52	12.7
	Max pipe length		m	15	25
	Max drop between I.U.&O.U		m	10	15
	Refrigerant load in factory		kg	1.2	1.3
	Maximum pipe length without charge refrigerant		m	5	5
	Refrigerant charge quantity for extra length		g/m	45	45
Working temp.	Cooling(Min~Max)		℃	-10~43	-10~43
	Low ambient cooling(Min~Max) with compressor heater		℃	/	/
	Heating(Min~Max)		℃	-15~24	-15~24

Model			Indoor unit	AB24ES1ERA(S)	AB28ES1ERA(S)
			Outoor unit	1U24GS1ERA	1U28GS2ERA(S)
Nominal performance data	Capacity	Nominal cooling	Btu/h	22200	26600
			kW (min-max)	7.1(2~7.3)	7.8(2.2~9.5)
		Nominal heating	Btu/h	24300	29000
			kW (min-max)	7.1(2.5~8)	8.5(2.5~10.0)
	Rated power input	Cooling	kW (min-max)	2.20(0.5~2.6)	2.43(0.5~4.2)
		Heating	kW (min-max)	1.91(0.5~2.6)	2.49(0.5~4.2)
	EER/COP			3.23/3.72	3.21/3.41
Seasonal performance data	Cooling P design(35℃)		kW	7.1	7.8
	Heating P design(-10℃)		kW	5.2	7.2
	SEER/SCOP			6.1/3.8	5.1/3.8
	Energy class (Cooling/Heating)			A++/A	A/A
	Annual energy consumption(Cooling)		kW	435	530
	Annual energy consumption(Heating)		kW	2044	2653
Indoor unit					
Electrical parameters	Power supply		Ph/V/Hz	1/220~230/50/60	1/220~230/50/60
Performance	Air flow(H/M/L)		m^3/h	1300/1100/870	1300/1100/870
	Sound power level(H/M/L)		dB(A)	61	61
	Sound pressure level(H/M/L)		dB(A)	44/40/36	44/40/36
Installation	External dimensions(W/D/H)		mm	840/840/240	840/840/240
	Shipping dimensions(W/D/H)		mm	928/923/347	928/923/347
	Net/Shipping weight		kg	25.5/30.5	25.5/30.5
	Controller		Standard	YR-HD	YR-HD
			Option	Please refer to control system in page 131	
Panel	Panel Model			PB-950JB	PB-950JB
	External dimensions(W/D/H)		mm	950/950/60	950/950/60
	Shipping dimensions(W/D/H)		mm	985/985/115	985/985/115
	Net/Shipping weight		kg	6.0/7.5	6.0/7.5
Outdoor unit					
Electrical parameters	Power supply		Ph/V/Hz	1/220~230/50/60	1/220~230/50/60
Performance	Air flow (H)		m^3/h	3000	3000
	Sound power level		dB(A)	70	70
	Sound pressure level		dB(A)	53	53
Installation	External dimensions(W/D/H)		mm	860/308/730	860/308/730
	Shipping dimensions(W/D/H)		mm	995/420/815	995/420/815
	Net/Shipping weight		kg	49/52	50.2/54.4
	Compressor type			Twin rotary	Twin rotary
	Refrigerant type			R410A	R410A
	GWP			2088	2088
	Refrigerant liquid pipe		mm	9.52	9.52
	Refrigerant gas pipe		mm	15.88	15.88
	Max pipe length		m	30	30
	Max drop between I.U.&O.U		m	20	20
	Refrigerant load in factory		kg	1.6	2
	Maximum pipe length without charge refrigerant		m	7	7
	Refrigerant charge quantity for extra length		g/m	45	45
Working temp.	Cooling(Min~Max)		℃	-10~46	-10~46
	Low ambient cooling(Min~Max) with compressor heater		℃	-25~46	/
	Heating(Min~Max)		℃	-15~24	-15~24

CASSETTE TYPE

EUROVENT CERTIFIED PERFORMANCE

AB36ES1ERA(S) **AB48ES1ERA(S)**

36K,48K

YR-HD

36K

48K

DC INVERTER 180° sine wave · Sleep mode · Group control · Central control · BMS · On-Off card · Fresh air channel · Premium filter · Evaporator self-cleaning · Quiet operation · 4-way airflow · Auto mode · AUTO Auto-swing · DRY DRY function

Super match · 24 hours timer · Auto restart · Smart defrosting · Child lock · Drain water pump · Branch outlet · 50 or 60 Hz Widely electricity Hz · -15°C heating · -10°C cooling · Self-diagnosis function · 3 min 3 minutes protection

Model			Indoor unit	AB36ES1ERA(S)	AB48ES1ERA(S)	AB48ES1ERA(S)
			Outoor unit	1U36HS1ERA(S)	1U48LS1ERA(S)	1U48LS1ERB(S)
Nominal performance data	Capacity	Nominal cooling	Btu/h	32400	41300	41300
			kW (min~max)	9.5(2.2~11.2)	12.1(6.0~14.1)	12.1(6.0~14.1)
		Nominal heating	Btu/h	34450	44350	44350
			kW (min~max)	10.1(2.5~11.8)	13.0(6.0~16.0)	13.0(6.0~16.0)
	Rated power input	Cooling	kW (min~max)	2.96(0.5~4.3)	4.02(2.0~6.0)	4.02(2.0~6.0)
		Heating	kW (min~max)	2.798(0.5~4.3)	4.00(2.0~6.0)	4.00(2.0~6.0)
	EER/COP			3.21/3.61	3.01/3.25	3.01/3.25
Seasonal performance data	Cooling P design(35°C)		kW	9.5	12.1	12.1
	Heating P design(-10°C)		kW	8.1	9	9
	SEER/SCOP			5.6/3.8	5.1/3.4	5.1/3.4
	Energy class (Cooling/Heating)			A+/A	/	/
	Annual energy consumption(Cooling)		kW	636	/	/
	Annual energy consumption(Heating)		kW	3251	/	/
Indoor unit						
Electrical parameters	Power supply		Ph/V/Hz	1/220~230/50/60	1/220~230/50/60	1/220~230/50/60
Performance	Air flow(H/M/L)		m^3/h	1650/1400/1300	1650/1400/1300	1650/1400/1300
	Sound power level(H/M/L)		dB(A)	65	65	65
	Sound pressure level(H/M/L)		dB(A)	49/47/44	49/47/44	49/47/44
Installation	External dimensions(W/D/H)		mm	840/840/290	840/840/290	840/840/290
	Shipping dimensions(W/D/H)		mm	933/923/395	933/923/395	933/923/395
	Net/Shipping weight		kg	31/37	31/37	31/37
	Controller		Standard	YR-HD	YR-HD	YR-HD
			Option	Please refer to control system in page 131		
Panel	Panel Model			PB-950JB	PB-950JB	PB-950JB
	External dimensions(W/D/H)		mm	950/950/60	950/950/60	950/950/60
	Shipping dimensions(W/D/H)		mm	985/985/115	985/985/115	985/985/115
	Net/Shipping weight		kg	6.0/7.5	6.0/7.5	6.0/7.5
Outdoor unit						
Electrical parameters	Power supply		Ph/V/Hz	1/220~230/50/60	1/220~230/50/60	3/380~400/50
Performance	Air flow (H)		m^3/h	4000	4200	4200
	Sound power level		dB(A)	70	73	73
	Sound pressure level		dB(A)	54	59	59
Installation	External dimensions(W/D/H)		mm	948/340/840	1008/410/830	1008/410/830
	Shipping dimensions(W/D/H)		mm	1040/430/1000	1142/498/1000	1142/498/1000
	Net/Shipping weight		kg	64/73	82/93	82/93
	Compressor type			Twin rotary	Twin rotary	Twin rotary
	Refrigerant type			R410A	R410A	R410A
	GWP			2088	2088	2088
	Refrigerant liquid pipe		mm	9.52	9.52	9.52
	Refrigerant gas pipe		mm	15.88	19.05	19.05
	Max pipe length		m	30	50	50
	Max drop between I.U.&O.U		m	20	30	30
	Refrigerant load in factory		kg	2.5	2.85	2.85
	Maximum pipe length without charge refrigerant		m	20	20	20
	Refrigerant charge quantity for extra length		g/m	45	45	45
Working temp.	Cooling(Min~Max)		°C	-10~46	-25~46	10~46
	Low ambient cooling(Min~Max) with compressor heater		°C	-25~46	-25~46	/
	Heating(Min~Max)		°C	-15~24	-15~24	-15~24

EUROVENT CERTIFIED PERFORMANCE

AB60ES2ERA(S) **AB60CS1ERA(S)**

60K

YR-HD

60K

60K

DC INVERTER 180° sine wave · Sleep mode · Group control · Central control · BMS · On-Off card · Fresh air channel · Premium filter · Evaporator self-cleaning · Quiet operation · 4-way airflow · Auto mode · AUTO Auto-swing · DRY DRY function

Super match · 24 hours timer · Auto restart · Smart defrosting · Child lock · Drain water pump · Branch outlet · 50 or 60 Hz Widely electricity Hz · -15°C heating · Self-diagnosis function · 3 min 3 minutes protection

Model			Indoor unit	AB60ES2ERA(S)	AB60CS1ERA(S)
			Outoor unit	1U60IS2ERB(S)	1U60IS1ERB(S)*
Nominal performance data	Capacity	Nominal cooling	Btu/h	46400	52200
			kW (min~max)	13.6(6.0~15.0)	15.3(4.0~16.5)
		Nominal heating	Btu/h	49450	54900
			kW (min~max)	14.5(6.0~16.5)	16.3(4.0~17.5)
	Rated power input	Cooling	kW (min~max)	4.50(2.0~6.0)	5.06(2.0~6.5)
		Heating	kW (min~max)	4.25(2.0~6.0)	5.07(2.0~6.5)
	EER/COP			3.02/3.41	3.02/3.21
Seasonal performance data	Cooling P design(35°C)		kW	/	/
	Heating P design(-10°C)		kW	/	/
	SEER/SCOP			/	/
	Energy class (Cooling/Heating)			/	/
	Annual energy consumption(Cooling)		kW	/	/
	Annual energy consumption(Heating)		kW	/	/
Indoor unit					
Electrical parameters	Power supply		Ph/V/Hz	1/220~230/50/60	1/220~230/50/60
Performance	Air flow(H/M/L)		m^3/h	1650/1400/1300	1980/1750/1500
	Sound power level(H/M/L)		dB(A)	65	67
	Sound pressure level(H/M/L)		dB(A)	49/47/44	50/45/42
Installation	External dimensions(W/D/H)		mm	840/840/290	1230/840/280
	Shipping dimensions(W/D/H)		mm	933/923/395	1325/920/370
	Net/Shipping weight		kg	31/37	41/44
	Controller		Standard	YR-HD	YR-HD
			Option	Please refer to control system in page 131	
Panel	Panel Model			PB-950JB	PB-1340IB
	External dimensions(W/D/H)		mm	950/950/60	1340/950/80
	Shipping dimensions(W/D/H)		mm	985/985/115	1400/995/115
	Net/Shipping weight		kg	6.0/7.5	8.4/12.7
Outdoor unit					
Electrical parameters	Power supply		Ph/V/Hz	3/380~400/50	3/380~400/50/60
Performance	Air flow (H)		m^3/h	6000	6500
	Sound power level		dB(A)	73	74
	Sound pressure level		dB(A)	60	61
Installation	External dimensions(W/D/H)		mm	948/340/1250	948/340/1250
	Shipping dimensions(W/D/H)		mm	1095/410/1400	1095/410/1400
	Net/Shipping weight		kg	91/101	96/106
	Compressor type			Twin rotary	Twin rotary
	Refrigerant type			R410A	R410A
	GWP			2088	2088
	Refrigerant liquid pipe		mm	9.52	9.52
	Refrigerant gas pipe		mm	19.05	19.05
	Max pipe length		m	50	50
	Max drop between I.U.&O.U		m	30	30
	Refrigerant load in factory		kg	3.3	3.3
	Maximum pipe length without charge refrigerant		m	20	20
	Refrigerant charge quantity for extra length		g/m	45	45
Working temp.	Cooling(Min~Max)		°C	10~46	-25~46*
	Low ambient cooling(Min~Max) with compressor heater		°C	/	-25~46*
	Heating(Min~Max)		°C	-15~24	-15~24

*Data is pending

CONVERTIBLE TYPE

Design Flexibility

Installation friendly

The indoor unit can be installed on the floor or on the ceiling, it is determined by your actual need. It greatly decreases the space needed and also it can provide the same level of comfort, at the same time make service and installation more convenient and flexible.

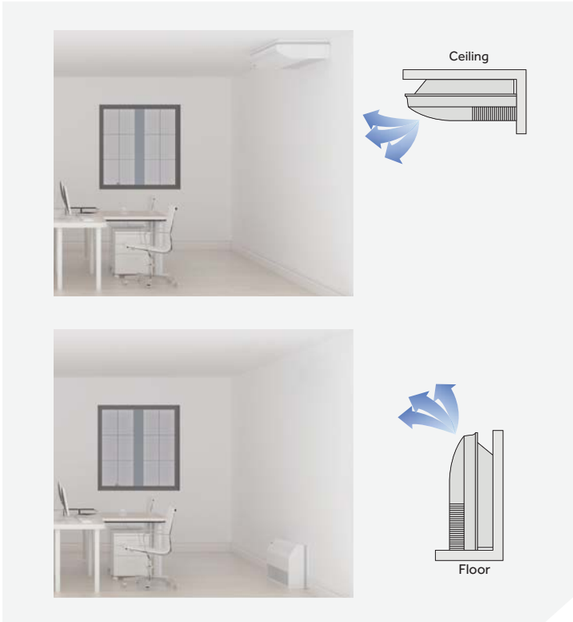

Ultra-thin unit body,thickness only 199mm (12k~24k)

The convertible indoor unit adopts a double drain pan design, the unit body is very thin, only 199mm. It is beautiful, elegant and space saving.

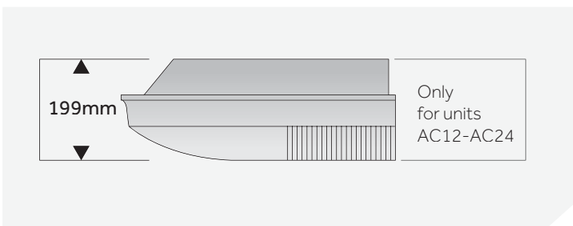

Comfort

Fresh-air intake (28k~60k)

There are fresh air intake holes in the unit, which can make the air more comfortable.

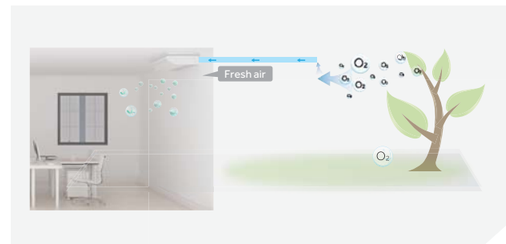

Wide angle air supplying

100° wide angle horizontal swing and 70° wide angle vertical swing design to make a precise control of the airflow, it equably distributes the comfortable air to every corner of the room.

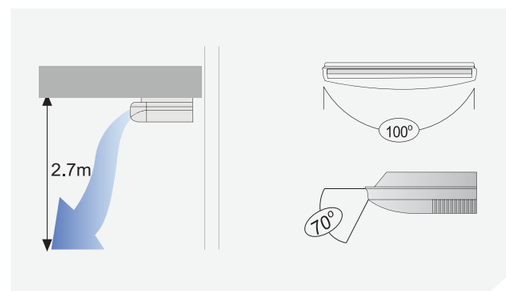

High efficiency air purify filter

The unit adopts high efficiency air purify filter, greatly improves the room air quality.

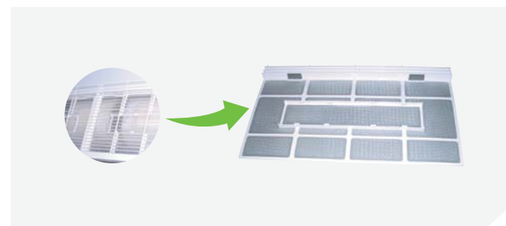

Automatic control of airflow direction

In order to realize the comfortable space with uniform temperature, the air conditioner uses two stepping motors to adjust the airflow automatically, send the air to every corner of the room.

When heating, it will supply large quantity of warm air in order to quickly and effectively warm up the floor from bottom to top, when cooling it will send the airflow from top to bottom until the cool air reach every corner of the room at the cooling mode.

The airflow direction can be controlled in 5 steps from up to down and from left to right , more selectable, more flexible.

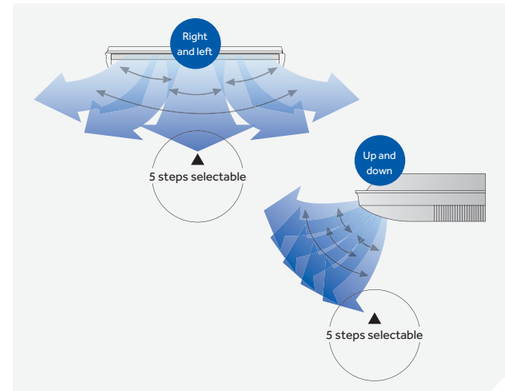

Easy Maintenance

Taken-out air purify filter

The filter can be easily take out, you need not take down the unit or open the air inlet grill, and realize convenient cleaning work.

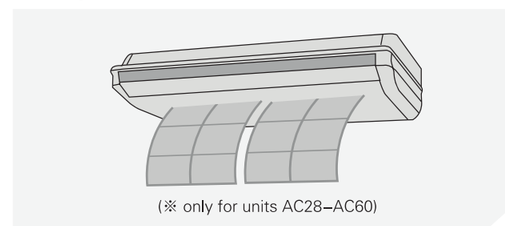

CONVERTIBLE TYPE
CONVERTIBLE TYPE
DUCT TYPE
SLIM LOW ESP DUCT
SLIM LOW ESP DUCT
LOW ESP DUCT
MEDIUM ESP DUCT
MEDIUM ESP DUCT
HIGH ESP DUCT
CABINET TYPE
CABINET TYPE

CONVERTIBLE TYPE

EUROVENT CERTIFIED PERFORMANCE

AC12CS1ERA(S) **AC18CS1ERA(S)** **AC24CS1ERA(S)**

12,18,24K

YR-HD

12K 18K 24K

DC INVERTER 180° sine wave · A++ Energy class · Sleep mode · Group control · Central control · BMS · On-Off card · Premium filter · Evaporator self-cleaning · Quiet operation · Left & Right airflow · 3D auto airflow · Auto mode · AUTO Auto-swing

DRY DRY function · Super match · 24 hours timer · Auto restart · Smart defrosting · Child lock · Compact design · 50 or 60 Hz Widely electricity Hz · -15°C heating · -10°C cooling · Self-diagnosis function · 3 min 3 minutes protection

Model			Indoor unit	AC12CS1ERA(S)	AC18CS1ERA(S)	AC24CS1ERA(S)
			Outoor unit	1U12BS3ERA	1U18FS2ERA(S)	1U24GS1ERA
Nominal performance data	Capacity	Nominal cooling	Btu/h	12000	17000	22200
			kW(min-max)	3.5(0.9~4.5)	5.0(1.8~5.8)	6.5(2~7.3)
		Nominal heating	Btu/h	13300	18700	24300
			kW(min-max)	3.9(1~4.8)	5.5(2~6.5)	7.1(2.5~8.0)
	Rated power input	Cooling	kW(min-max)	1.03(0.28~1.8)	1.53(0.55~2)	2.16(0.5~2.6)
		Heating	kW(min-max)	1.02(0.28~1.8)	1.48(0.6~2)	2.08(0.5~2.6)
	EER/COP			3.39/3.81	3.26/3.72	3.01/3.41
Seasonal performance data	Cooling P design(35°C)		kW	3.5	5	6.5
	Heating P design(-10°C)		kW	3.4	4.7	5
	SEER/SCOP			6.1/3.8	5.6/3.8	5.1/3.8
	Energy class(Cooling/Heating)			A++/A	A+/A	A/A
	Annual energy consumption(Cooling)		kW	222	315	489
	Annual energy consumption(Heating)		kW	1427	1868	2127
Indoor unit						
Electrical parameters	Power supply		Ph/V/Hz	1/220~230/50/60	1/220~230/50/60	1/220~230/50/60
Performance	Air flow(H/M/L)		m^3/h	650/550/450	800/720/650	800/720/650
	Sound power level(H/M/L)		dB(A)	58	62	62
	Sound pressure level(H/M/L)		dB(A)	41/36/31	44/42/39	44/42/39
Installation	External dimensions(W/D/H)		mm	990/655/199	990/655/199	990/655/199
	Shipping dimensions(W/D/H)		mm	1150/750/300	1150/750/300	1150/750/300
	Net/Shipping weight		kg	26.3/32.3	28.3/34.3	28.3/34.3
	Controller		Standard	YR-HD	YR-HD	YR-HD
			Option	Please refer to control system in page 131		
Outdoor unit						
Electrical parameters	Power supply		Ph/V/Hz	1/230/50	1/230/50	1/220~230/50/60
Performance	Air flow (H)		m^3/h	1700	2200	3000
	Sound power level		dB(A)	62/63	63/64	70
	Sound pressure level		dB(A)	52/53	53/54	53
Installation	External dimensions(W/D/H)		mm	780/245/540	810/288/688	860/308/730
	Shipping dimensions(W/D/H)		mm	930/340/614	949/406/745	995/420/815
	Net/Shipping weight		kg	32.5/35.5	43/45.5	49/52
	Compressor type			Rotary	Rotary	Twin rotary
	Refrigerant type			R410A	R410A	R410A
	GWP			2088	2088	2088
	Refrigerant liquid pipe		mm	6.35	6.35	9.52
	Refrigerant gas pipe		mm	9.52	12.7	15.88
	Max pipe length		m	15	25	30
	Max drop between I.U.&O.U		m	10	15	20
	Refrigerant load in factory		kg	1.2	1.3	1.6
	Maximum pipe length without charge refrigerant		m	5	5	7
	Refrigerant charge quantity for extra length		g/m	45	45	45
Working temp.	Cooling(Min~Max)		˚C	-10~43	-10~43	-10~46
	Low ambient cooling(Min~Max) with compressor heater		˚C	/	/	-25~46
	Heating(Min~Max)		˚C	-15~24	-15~24	-15~24

EUROVENT CERTIFIED PERFORMANCE

AC28ES1ERA(S) **AC36ES1ERA(S)**

28K 36K

YR-HD

28,36K

DC INVERTER 180° sine wave · Sleep mode · Group control · Central control · BMS · On-Off card · Fresh air channel · Premium filter · Evaporator self-cleaning · Quiet operation · Left & Right airflow · 3D auto airflow · Wide-angle airflow · Auto mode

AUTO Auto-swing · DRY DRY function · Super match · 24 hours timer · Auto restart · Smart defrosting · Child lock · 50 or 60 Hz Widely electricity Hz · -15°C heating · -10°C cooling · Self-diagnosis function · 3 min 3 minutes protection

Model			Indoor unit	AC28ES1ERA(S)	AC36ES1ERA(S)
			Outoor unit	1U28GS2ERA(S)	1U36HS1ERA(S)
Nominal performance data	Capacity	Nominal cooling	Btu/h	28300	34000
			kW(min-max)	8.3(2.1~10.0)	10.0(2.2~11.0)
		Nominal heating	Btu/h	30700	36100
			kW(min-max)	9.0(2.2~10.5)	10.6(2.2~11.8)
	Rated power input	Cooling	kW(min-max)	2.57(0.5~4.2)	2.77(0.5~4.3)
		Heating	kW(min-max)	2.43(0.5~4.2)	2.94(0.5~4.3)
	EER/COP			3.23/3.71	3.61/3.61
Seasonal performance data	Cooling P design(35°C)		kW	8.3	10
	Heating P design(-10°C)		kW	7.5	8.1
	SEER/SCOP			5.6/3.8	5.6/3.8
	Energy class(Cooling/Heating)			A+/A	A+/A
	Annual energy consumption(Cooling)		kW	534	655
	Annual energy consumption(Heating)		kW	2773	3129
Indoor unit					
Electrical parameters	Power supply		Ph/V/Hz	1/220~230/50/60	1/220~230/50/60
Performance	Air flow(H/M/L)		m^3/h	1630/1537/1375	1630/1537/1375
	Sound power level(H/M/L)		dB(A)	64	64
	Sound pressure level(H/M/L)		dB(A)	47/43/41	47/43/41
Installation	External dimensions(W/D/H)		mm	1298/700/240	1298/700/240
	Shipping dimensions(W/D/H)		mm	1500/790/315	1500/790/315
	Net/Shipping weight		kg	37/47	37/47
	Controller		Standard	YR-HD	YR-HD
			Option	Please refer to control system in page 131	
Outdoor unit					
Electrical parameters	Power supply		Ph/V/Hz	1/220~230/50/60	1/220~230/50/60
Performance	Air flow (H)		m^3/h	3000	4000
	Sound power level		dB(A)	70	70
	Sound pressure level		dB(A)	53	54
Installation	External dimensions(W/D/H)		mm	860/308/730	948/340/840
	Shipping dimensions(W/D/H)		mm	995/420/815	1040/430/1000
	Net/Shipping weight		kg	50.2/54.4	64/73
	Compressor type			Twin rotary	Twin rotary
	Refrigerant type			R410A	R410A
	GWP			2088	2088
	Refrigerant liquid pipe		mm	9.52	9.52
	Refrigerant gas pipe		mm	15.88	15.88
	Max pipe length		m	30	30
	Max drop between I.U.&O.U		m	20	20
	Refrigerant load in factory		kg	2	2.5
	Maximum pipe length without charge refrigerant		m	7	20
	Refrigerant charge quantity for extra length		g/m	45	45
Working temp.	Cooling(Min~Max)		˚C	-10~46	-10~46
	Low ambient cooling(Min~Max) with compressor heater		˚C	/	-25~46
	Heating(Min~Max)		˚C	-15~24	-15~24

CONVERTIBLE TYPE

EUROVENT CERTIFIED PERFORMANCE

AC48FS1ERA(S) **AC60FS1ERA(S)**

48,60K

YR-HD

48K

60K

DC INVERTER 180° sine wave · Sleep mode · Group control · Central control · BMS · On-Off card · Fresh air channel · Premium filter · Evaporator self-cleaning · Quiet operation · Left & Right airflow · 3D auto airflow · Wide-angle airflow · Auto mode

AUTO Auto-swing · DRY DRY function · Super match · 24 hours timer · Auto restart · Smart defrosting · Child lock · 50 or 60 Hz Widely electricity Hz · -15°C heating · -10°C cooling · Self-diagnosis function · 3 min 3 minutes protection

Model			Indoor unit	AC48FS1ERA(S)	AC48FS1ERA(S)	AC60FS1ERA(S)	AC60FS1ERA(S)
			Outdoor unit	1U48LS1ERA(S)	1U48LS1ERB(S)	1U60IS2ERB(S)	1U60IS1ERB(S)*
Nominal performance data	Capacity	Nominal cooling	Btu/h	42650	42650	47750	52900
			kW(min-max)	12.5(6.0~14.5)	12.5(6.0~14.5)	14.0(6.0~15.0)	15.5(4.0~16)
		Nominal heating	Btu/h	48100	48100	51150	56300
			kW(min-max)	14.1(6.0~16.5)	14.1(6.0~16.5)	15.0(6.0~17.0)	16.5(4.0~18.0)
	Rated power input	Cooling	kW(min-max)	3.89(2.0~6.0)	3.89(2.0~6.0)	4.34(2.0~6.0)	5.13(2.0~6.5)
		Heating	kW(min-max)	4.1(2.0~6.0)	4.1(2.0~6.0)	4.14(2.0~6.0)	4.83(2.0~6.5)
	EER/COP			3.21/3.44	3.21/3.44	3.23/3.62	3.02/3.42
Seasonal performance data	Cooling P design(35°C)		kW	12.5	12.5	/	/
	Heating P design(-10°C)		kW	9	9	/	/
	SEER/SCOP			5.6/3.4	5.6/3.4	/	/
	Energy class(Cooling/Heating)			A+/A	A+/A	/	/
	Annual energy consumption(Cooling)		kW	/	/	/	/
	Annual energy consumption(Heating)		kW	/	/	/	/
Indoor unit							
Electrical parameters	Power supply		Ph/V/Hz	1/220~230/50/60	1/220~230/50/60	1/220~230/50/60	1/220~230/50/60
Performance	Air flow(H/M/L)		m^3/h	2000/1800/1400	2000/1800/1400	2000/1800/1400	2000/1800/1400
	Sound power level(H/M/L)		dB(A)	66	66	66	66
	Sound pressure level(H/M/L)		dB(A)	49/47/45	49/47/45	49/47/45	49/47/45
Installation	External dimensions(W/D/H)		mm	1580/700/240	1580/700/240	1580/700/240	1580/700/240
	Shipping dimensions(W/D/H)		mm	1710/790/315	1710/790/315	1710/790/315	1710/790/315
	Net/Shipping weight		kg	54/61	54/61	54/61	54/61
	Controller		Standard	YR-HD	YR-HD	YR-HD	YR-HD
			Option	Please refer to control system in page 131			
Outdoor unit							
Electrical parameters	Power supply		Ph/V/Hz	1/220~230/50/60	3/380~400/50	3/380~400/50	3/380~400/50/60
Performance	Air flow (H)		m^3/h	4200	4200	6000	6500
	Sound power level		dB(A)	73	73	73	74
	Sound pressure level		dB(A)	59	59	60	61
Installation	External dimensions(W/D/H)		mm	1008/410/830	1008/410/830	948/340/1250	948/340/1250
	Shipping dimensions(W/D/H)		mm	1142/498/1000	1142/498/1000	1095/410/1400	1095/410/1400
	Net/Shipping weight		kg	82/93	82/93	91/101	96/106
	Compressor type			Twin rotary	Twin rotary	Twin rotary	Twin rotary
	Refrigerant type			R410A	R410A	R410A	R410A
	GWP			2088	2088	2088	2088
	Refrigerant liquid pipe		mm	9.52	9.52	9.52	9.52
	Refrigerant gas pipe		mm	19.05	19.05	19.05	19.05
	Max pipe length		m	50	50	50	50
	Max drop between I.U.&O.U		m	30	30	30	30
	Refrigerant load in factory		kg	2.85	2.85	3.3	3.3
	Maximum pipe length without charge refrigerant		m	20	20	20	20
	Refrigerant charge quantity for extra length		g/m	45	45	45	45
Working temp.	Cooling(Min~Max)		˚C	-25~46	10~46	10~46	-25~46*
	Low ambient cooling(Min~Max) with compressor heater		˚C	-25~46	/	/	-25~46*
	Heating(Min~Max)		˚C	-15~24	-15~24	-15~24	-15~24

*Data is pending

DUCT TYPE

Design Flexibility

Super thin design

The height of slim low ESP duct unit is 185mm only , which is advanced in the industry and make the silmmest ceiling drop.

(※only for units AD12S-AD24S)

The height of medium ESP duct unit is 250mm height only ,which is advanced in the industry, make the silmmest ceiling drop.

High lift-up drain pump

It can lift condensed water up to1000mm, which make installation more flexible according to the layout.

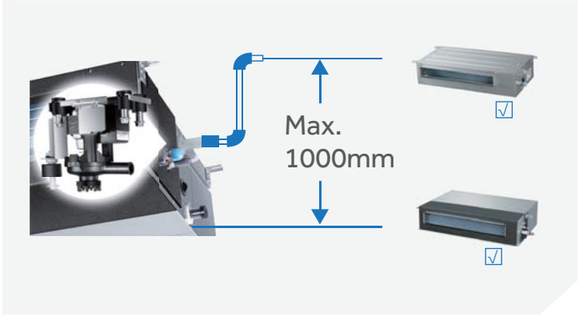

Design Flexibility

Return air-intake choices

Friendly design: Rear air return or bottom air return is available.

Free setting of air discharge duct

The number of the airflow outlet and its installation position can be freely selected according to the surrounding of the room, sufficiently considering the load of the room and the uniform temp. of the room to realize more perfect comfort.

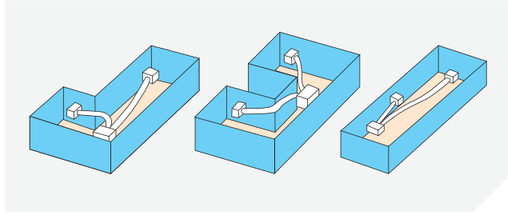

Left or right drain outlet

Drain direction can be left or right according to the layout.

Easy Installation

Adjusted ESP easy way

ESP can be adjusted by wired controller, so installer don’t need to climb the ladders to adjust ESP.

Comfort

Super silent

The fan and airflow path of slim low ESP duct unit are designed for silent , brings 52dB(A) sound power level, compared with 53dB(A) competitors, we already reach top sound level.

Fresh air inlet

The preset fresh air channel can bring the outside fresh air into the room which improve the room air quality. Creat fresh and comfort atmosphere.

SLIM LOW ESP DUCT

EUROVENT CERTIFIED PERFORMANCE

AD12SS1ERA(N)

12k

YR-E17

12k

DC INVERTER 180° sine wave | DC motor | Sleep mode | Group control | Central control | BMS | On-Off card | Premium filter | Evaporator self-cleaning | Super quiet | Quiet operation | Left & Right airflow | 3D auto airflow | Auto mode

AUTO Auto-swing | DRY DRY function | Super match | 24 hours timer | Auto restart | Smart defrosting | Child lock | Adjustable E.S.P | Two-way drain | Compact design | 50 or 60 Hz Widely electricity Hz | -15°C heating | -10°C cooling | Self-diagnosis function

3 min 3 minutes protection

Model				Standard Indoor unit (drain pump excluded)	AD12SS1ERA(N)
				Optional Indoor unit (drain pump included)	AD12SS1ERA(N)(P)
				Outoor unit	1U12BS3ERA
Nominal performance data	Capacity	Nominal cooling	Btu/h		12000
			kW(min~max)		3.50(0.9~4.5)
		Nominal heating	Btu/h		13700
			kW(min~max)		4.00(1~4.8)
	Rated power input	Cooling	kW(min~max)		1.03(0.28~1.8)
		Heating	kW(min~max)		1.07(0.28~1.8)
	EER/COP				3.39/3.73
Seasonal performance data	Cooling P design(35°C)		kW		3.5
	Heating P design(-10°C)		kW		3
	SEER/SCOP				5.6/3.8
	Energy class (Cooling/Heating)				A+/A
	Annual energy consumption(Cooling)		kW		241
	Annual energy consumption(Heating)		kW		1427
Indoor unit					
Electrical parameters	Power supply		Ph/V/Hz		1/220~230/50/60
Performance	Air flow(H/M/L)		m^3/h		600/480/420
	External static pressure		Pa		0/10/20/30
	Sound power level(H/M/L)		dB(A)		52
	Sound pressure level(H/M/L)		dB(A)		35/30/22
Installation	External dimensions(W/D/H)		mm		850/420/185
	Shipping dimensions(W/D/H)		mm		1025/525/260
	Net/Shipping weight		kg		16/21
	Controller		Standard		YR-E17
			Option		Please refer to control system in page 131
Panel	Panel Model				P1B-890IA/D
	External dimensions(W/D/H)		mm		890/190/100(outlet panel) 890/290.5/32.4(inlet panel)
	Shipping dimensions(W/D/H)		mm		938/335/220
	Net/Shipping weight		kg		4/5
Outdoor unit					
Electrical parameters	Power supply		Ph/V/Hz		1/230/50
Performance	Air flow (H)		m^3/h		1700
	Sound power level		dB(A)		62/63
	Sound pressure level		dB(A)		52/53
Installation	External dimensions(W/D/H)		mm		780/245/540
	Shipping dimensions(W/D/H)		mm		930/340/614
	Net/Shipping weight		kg		32.5/35.5
	Compressor type				Rotary
	Refrigerant type				R410A
	GWP				2088
	Refrigerant liquid pipe		mm		6.35
	Refrigerant gas pipe		mm		9.52
	Max pipe length		m		15
	Max drop between I.U.&O.U		m		10
	Refrigerant load in factory		kg		1.2
	Maximum pipe length without charge refrigerant		m		5
	Refrigerant charge quantity for extra length		g/m		45
Working temp.	Cooling(Min~Max)		°C		-10~43
	Low ambient cooling(Min~Max) with compressor heater		°C		/
	Heating(Min~Max)		°C		-15~24

SLIM LOW ESP DUCT

EUROVENT CERTIFIED PERFORMANCE

AD18SS1ERA(N) **AD24SS1ERA(N)**

18K

24K

YR-E17

18,24K

DC INVERTER 180° sine wave | DC motor | Sleep mode | Group control | Central control | BMS | On-Off card | Premium filter | Evaporator self-cleaning | Super quiet | Quiet operation | Left & Right airflow | 3D auto airflow | Auto mode

AUTO Auto-swing | DRY DRY function | Super match | 24 hours timer | Auto restart | Smart defrosting | Child lock | Adjustable E.S.P | Two-way drain | Compact design | 50 or 60 Hz Widely electricity Hz | -15°C heating | -10°C cooling | Self-diagnosis function

3 min 3 minutes protection

Model				Standard Indoor unit (drain pump excluded)	AD18SS1ERA(N)	AD24SS1ERA(N)
				Optional Indoor unit (drain pump included)	AD18SS1ERA(N)(P)	AD24SS1ERA(N)(P)
				Outoor unit	1U18FS2ERA(S)	1U24GS1ERA
Nominal performance data	Capacity	Nominal cooling	Btu/h		17000	24200
			kW(min~max)		5.0(1.8~6)	7.1(2~7.6)
		Nominal heating	Btu/h		18800	24200
			kW(min~max)		5.5(2~6.2)	7.1(3~8.3)
	Rated power input	Cooling	kW(min~max)		1.53(0.55~2.1)	2.19(0.6~2.6)
		Heating	kW(min~max)		1.47(0.6~2.1)	1.91(0.6~2.6)
	EER/COP				3.26/3.73	3.24/3.72
Seasonal performance data	Cooling P design(35°C)		kW		5	7.1
	Heating P design(-10°C)		kW		5.5	5.6
	SEER/SCOP				5.6/4	5.6/4
	Energy class (Cooling/Heating)				A+/A+	A+/A+
	Annual energy consumption(Cooling)		kW		315	446
	Annual energy consumption(Heating)		kW		1961	2089
Indoor unit						
Electrical parameters	Power supply		Ph/V/Hz		1/220~230/50/60	1/220~230/50/60
Performance	Air flow(H/M/L)		m^3/h		900/750/600	1000/850/750
	External static pressure		Pa		0/10/20/30	0/10/20/30
	Sound power level(H/M/L)		dB(A)		54	57
	Sound pressure level(H/M/L)		dB(A)		36/30/26	39/32/29
Installation	External dimensions(W/D/H)		mm		1170/420/185	1170/420/185
	Shipping dimensions(W/D/H)		mm		1365/540/270	1365/540/270
	Net/Shipping weight		kg		22/28	24/30
	Controller		Standard		YR-E17	YR-E17
			Option		Please refer to control system in page 131	
Panel	Panel Model				P1B-1210IA/D	P1B-1210IA/D
	External dimensions(W/D/H)		mm		1210/190/100(outlet panel) 1210/290.5/32.4 (inlet panel)	1210/190/100(outlet panel) 1210/290.5/32.4 (inlet panel)
	Shipping dimensions(W/D/H)		mm		1258/335/220	1258/335/220
	Net/Shipping weight		kg		5/6	5/6
Outdoor unit						
Electrical parameters	Power supply		Ph/V/Hz		1/230/50	1/220~230/50/60
Performance	Air flow (H)		m^3/h		2200	3000
	Sound power level		dB(A)		63/64	70
	Sound pressure level		dB(A)		53/54	53
Installation	External dimensions(W/D/H)		mm		810/288/688	860/308/730
	Shipping dimensions(W/D/H)		mm		949/406/745	995/420/815
	Net/Shipping weight		kg		43/45.5	49/52
	Compressor type				Rotary	Twin rotary
	Refrigerant type				R410A	R410A
	GWP				2088	2088
	Refrigerant liquid pipe		mm		6.35	9.52
	Refrigerant gas pipe		mm		12.7	15.88
	Max pipe length		m		25	30
	Max drop between I.U.&O.U		m		15	20
	Refrigerant load in factory		kg		1.3	1.6
	Maximum pipe length without charge refrigerant		m		5	7
	Refrigerant charge quantity for extra length		g/m		45	45
Working temp.	Cooling(Min~Max)		°C		-10~43	-10~46
	Low ambient cooling(Min~Max) with compressor heater		°C		/	-25~46
	Heating(Min~Max)		°C		-15~24	-15~24

LOW ESP DUCT

EUROVENT CERTIFIED PERFORMANCE

AD12LS1ERA **AD18LS1ERA** **AD24LS1ERA**

12k

18,24K

YR-E17

12k

18K

24K

DC INVERTER 180° sine wave · Sleep mode · Group control · Central control · BMS · On-Off card · Premium filter · Evaporator self-cleaning · Quiet operation · Auto mode · AUTO Auto-swing · DRY DRY function · Super match · 24 hours timer

Auto restart · Smart defrosting · Child lock · Two-way drain · 50 or 60 Hz Widely electricity Hz · -15°C heating · -10°C cooling · Self-diagnosis function · 3 min 3 minutes protection

Model				Standard Indoor	AD12LS1ERA	AD18LS1ERA	AD24LS1ERA
				Outoor unit	1U12BS3ERA	1U18FS2ERA(S)	1U24GS1ERA
Nominal performance data	Capacity	Nominal cooling		Btu/h	12000	17000	23200
				kW(min-max)	3.50(0.9~4.5)	5.0(1.8~6)	6.8(2~7.6)
		Nominal heating		Btu/h	13700	18800	24200
				kW(min-max)	4.00(1~4.8)	5.5(2~6.2)	7.1(3~8.3)
	Rated power input	Cooling		kW(min-max)	1.03(0.28~1.8)	1.53(0.55~2.1)	2.10(0.6~2.6)
		Heating		kW(min-max)	1.07(0.28~1.8)	1.47(0.6~2.1)	1.91(0.6~2.6)
	EER/COP				3.39/3.73	3.26/3.73	3.24/3.72
Seasonal performance data	Cooling P design(35°C)			kW	3.5	5	6.8
	Heating P design(-10°C)			kW	2.8	4.7	5.2
	SEER/SCOP				5.1/3.8	5.1/3.8	5.1/3.8
	Energy class(Cooling/Heating)				A/A	A/A	A/A
	Annual energy consumption(Cooling)			kW	246	343	451
	Annual energy consumption(Heating)			kW	1235	1702	1989
Indoor unit							
Electrical parameters	Power supply			Ph/V/Hz	1/220~230/50/60	1/220~230/50/60	1/220~230/50/60
Performance	Air flow(H/M/L)			m^3/h	550/450/400	850/780/600	1200/1050/850
	External static pressure			Pa	0/25	0/25	0/25
	Sound power level(H/M/L)			dB(A)	58	60	65
	Sound pressure level(H/M/L)			dB(A)	41/37/34	43/41/35	48/46/42
Installation	External dimensions(W/D/H)			mm	610/484/220	1090/484/220	1090/484/220
	Shipping dimensions(W/D/H)			mm	710/545/280	1174/545/280	1174/545/280
	Net/Shipping weight			kg	14/16	23/26.5	25.2/28.4
	Controller			Standard	YR-E17	YR-E17	YR-E17
				Option	Please refer to control system in page 131		
Outdoor unit							
Electrical parameters	Power supply			Ph/V/Hz	1/230/50	1/230/50	1/220～230/50/60
Performance	Air flow (H)			m^3/h	1700	2200	3000
	Sound power level			dB(A)	62/63	63/64	70
	Sound pressure level			dB(A)	52/53	53/54	53
Installation	External dimensions(W/D/H)			mm	780/245/540	810/288/688	860/308/730
	Shipping dimensions(W/D/H)			mm	930/340/614	949/406/745	995/420/815
	Net/Shipping weight			kg	32.5/35.5	43/45.5	49/52
	Compressor type				Rotary	Rotary	Twin rotary
	Refrigerant type				R410A	R410A	R410A
	GWP				2088	2088	2088
	Refrigerant liquid pipe			mm	6.35	6.35	9.52
	Refrigerant gas pipe			mm	9.52	12.7	15.88
	Max pipe length			m	15	25	30
	Max drop between I.U.&O.U			m	10	15	20
	Refrigerant load in factory			kg	1.2	1.3	1.6
	Maximum pipe length without charge refrigerant			m	5	5	7
	Refrigerant charge quantity for extra length			g/m	45	45	45
Working temp.	Cooling(Min-Max)			°C	-10~43	-10~43	-25~46
	Low ambient cooling(Min-Max) with compressor heater			°C	/	/	-10~46
	Heating(Min-Max)			°C	-15~24	-15~24	-15~24

MEDIUM ESP DUCT

EUROVENT CERTIFIED PERFORMANCE

AD12MS1ERA **AD18MS1ERA** **AD24MS2ERA** **AD28MS2ERA(S)**

12k

18K

24,28K

YR-E17

12K

18K,24K,28K

DC INVERTER 180° sine wave · DC motor · A++ Energy class · Sleep mode · Group control · Central control · BMS · On-Off card · Fresh air channel · Premium filter · Evaporator self-cleaning · Quiet operation · Super quiet · Auto mode

AUTO Auto-swing · DRY DRY function · Super match · 24 hours timer · Auto restart · Smart defrosting · Child lock · Adjustable E.S.P · Two-way drain · Drain water pump · Compact design · 50 or 60 Hz Widely electricity Hz · -15°C heating · -10°C cooling

Self-diagnosis function · 3 min 3 minutes protection

Model				Standard Indoor unit (drain pump included)	AD12MS1ERA	AD18MS1ERA	AD24MS2ERA	AD28MS2ERA(S)
				Optional Indoor unit (drain pump excluded)	AD12MS1ERA(D)	AD18MS1ERA(D)	AD24MS2ERA(D)	AD28MS2ERA(S)(D)
				Outoor unit	1U12BS3ERA	1U18FS2ERA(S)	1U24GS1ERA	1U28GS2ERA(S)
Nominal performance data	Capacity	Nominal cooling		Btu/h	12000	17000	24000	27300
				kW(min-max)	3.50(0.9~4.5)	5.0(1.8~6)	7.1(2.0~8.2)	8(2.5~9.0)
		Nominal heating		Btu/h	13700	18800	27300	30700
				kW(min-max)	4.00(1~4.8)	5.5(2~6.2)	8(2.5~8.5)	9.0(3.0~9.5)
	Rated power input	Cooling		kW(min-max)	1.08(0.28~1.8)	1.55(0.55~2.0)	2.19(0.6~2.6)	2.48(0.6~3.1)
		Heating		kW(min-max)	1.08(0.28~1.8)	1.48(0.6~2.0)	2.16(0.6~2.6)	2.42(0.6~3.1)
	EER/COP				3.23/3.71	3.23/3.71	3.23/3.71	3.23/3.71
Seasonal performance data	Cooling P design(35°C)			kW	3.5	5	7.1	8
	Heating P design(-10°C)			kW	2.7	4.5	6	7.2
	SEER/SCOP				6.1/4	6.1/4	6.1/4	5.6/4.0
	Energy class(Cooling/Heating)				A++/A+	A++/A+	A++/A+	A+/A+
	Annual energy consumption(Cooling)			kW	215	291	415	532
	Annual energy consumption(Heating)			kW	1020	1782	2013	2550
Indoor unit								
Electrical parameters	Power supply			Ph/V/Hz	1/220~230/50/60	1/220~230/50/60	1/220~230/50/60	1/220~230/50/60
Performance	Air flow(H/M/L)			m^3/h	550/460/400	920/750/580	1050/840/630	1300/900/700
	External static pressure			Pa	10/30(default)/50/70	10/30(default)/50/70	10/30(default)/50/70	10/30(default)/50/70
	Sound power level(H/M/L)			dB(A)	56	57	58	62
	Sound pressure level(H/M/L)			dB(A)	36/33/29	37/34/30	38/35/31	40/37/33
Installation	External dimensions(W/D/H)			mm	672/655/250	957/655/250	957/655/250	957/655/250
	Shipping dimensions(W/D/H)			mm	920/820/340	1170/860/340	1170/860/340	1170/860/340
	Net/Shipping weight			kg	21.8/26	25.5/33	31.2/36.8	31.2/36.8
	Controller			Standard	YR-E17	YR-E17	YR-E17	YR-E17
				Option	Please refer to control system in page 131			
Outdoor unit								
Electrical parameters	Power supply			Ph/V/Hz	1/230/50	1/230/50	1/220~230/50/60	1/220~230/50/60
Performance	Air flow (H)			m^3/h	1700	2200	3000	3000
	Sound power level			dB(A)	62/63	63/64	70	70
	Sound pressure level			dB(A)	52/53	53/54	53	53
Installation	External dimensions(W/D/H)			mm	780/245/540	810/288/688	860/308/730	860/308/730
	Shipping dimensions(W/D/H)			mm	930/340/614	949/406/745	995/420/815	995/420/815
	Net/Shipping weight			kg	32.5/35.5	43/45.5	49/52	50.2/54.4
	Compressor type				Rotary	Rotary	Twin rotary	Twin rotary
	Refrigerant type				R410A	R410A	R410A	R410A
	GWP				2088	2088	2088	2088
	Refrigerant liquid pipe			mm	6.35	6.35	9.52	9.52
	Refrigerant gas pipe			mm	9.52	12.7	15.88	15.88
	Max pipe length			m	15	25	30	30
	Max drop between I.U.&O.U			m	10	15	20	20
	Refrigerant load in factory			kg	1.2	1.3	1.6	2
	Maximum pipe length without charge refrigerant			m	5	5	7	7
	Refrigerant charge quantity for extra length			g/m	45	45	45	45
Working temp.	Cooling(Min-Max)			°C	-10~43	-10~43	-10~46	-10~46
	Low ambient cooling(Min-Max) with compressor heater			°C	/	/	-25~46	/
	Heating(Min-Max)			°C	-15~24	-15~24	-15~24	-15~24

MEDIUM ESP DUCT

EUROVENT CERTIFIED PERFORMANCE

AD36NS1ERA(S) **AD48NS1ERA(S)**

36,48k

YR-E17

36k

48k

DC INVERTER 180° sine wave · Sleep mode · Group control · Central control · BMS · On-Off card · Premium filter · Evaporator self-cleaning · Quiet operation · Auto mode · AUTO Auto-swing · DRY DRY function · Super match · 24 24 hours timer · Auto restart · Smart defrosting · Child lock · Two-way drain · 50 or 60 Hz Widely electricity Hz · -15°C heating · -10°C cooling · Self-diagnosis function · 3 min 3 minutes protection

HIGH ESP DUCT

EUROVENT CERTIFIED PERFORMANCE

AD48HS1ERA(S) **AD60HS1ERA(S)**

48k

60k

YR-E17

48,60k

DC INVERTER 180° sine wave · Sleep mode · Group control · Central control · BMS · On-Off card · Premium filter · Evaporator self-cleaning · Quiet operation · Far distance air supplying · Auto mode · AUTO Auto-swing · DRY DRY function · Super match · 24 24 hours timer · Auto restart · Smart defrosting · Child lock · 50 or 60 Hz Widely electricity Hz · -15°C heating · -10°C cooling · Self-diagnosis function · 3 min 3 minutes protection

Model			Standard Indoor	AD36NS1ERA(S)	AD48NS1ERA(S)	AD48NS1ERA(S)
			Outoor unit	1U36HS1ERA(S)	1U48LS1ERA(S)	1U48LS1ERB(S)
Nominal performance data	Capacity	Nominal cooling	Btu/h	34000	41300	41300
			kW(min-max)	10.0(2.2-11.0)	12.1(6.0-14.5)	12.1(6.0-14.5)
		Nominal heating	Btu/h	36100	48100	48100
			kW(min-max)	11.0(2.2-12.0)	14.1(6.0-16.5)	14.1(6.0-16.5)
	Rated power input	Cooling	kW(min-max)	3.29(0.5-4.3)	4.30(2.0-6.0)	4.30(2.0-6.0)
		Heating	kW(min-max)	3.05(0.5-4.3)	4.39(2.0-6.0)	4.39(2.0-6.0)
	EER/COP			3.01/3.61	2.81/3.21	2.81/3.21
Seasonal performance data	Cooling P design(35°C)		kW	10	12.1	12.1
	Heating P design(-10°C)		kW	8.1	9	9
	SEER/SCOP			5.2/3.8	5.1/3.4	5.1/3.4
	Energy class(Cooling/Heating)			A/A	A/A	A/A
	Annual energy consumption(Cooling)		kW	666	/	/
	Annual energy consumption(Heating)		kW	3012	/	/
Indoor unit						
Electrical parameters	Power supply		Ph/V/Hz	1/220~230/50/60	1/220~230/50/60	1/220~230/50/60
Performance	Air flow(H/M/L)		m^3/h	1630/1488/1421	2090/1970/1792	2090/1970/1792
	External static pressure		Pa	50(default)/100	50(default)/100	50(default)/100
	Sound power level(H/M/L)		dB(A)	64	66	66
	Sound pressure level(H/M/L)		dB(A)	44/41/39	46/44/41	46/44/41
Installation	External dimensions(W/D/H)		mm	1135/742/270	1135/742/270	1135/742/270
	Shipping dimensions(W/D/H)		mm	1357/856/373	1357/856/373	1357/856/373
	Net/Shipping weight		kg	45.4/51.3	52/55	52/55
	Controller		Standard	YR-E17	YR-E17	YR-E17
			Option	Please refer to control system in page 131		
Outdoor unit						
Electrical parameters	Power supply		Ph/V/Hz	1/220~230/50/60	1/220~230/50/60	3/380~400/50
Performance	Air flow (H)		m^3/h	4000	4200	4200
	Sound power level		dB(A)	70	73	73
	Sound pressure level		dB(A)	54	59	59
Installation	External dimensions(W/D/H)		mm	948/340/840	1008/410/830	1008/410/830
	Shipping dimensions(W/D/H)		mm	1040/430/1000	1142/498/1000	1142/498/1000
	Net/Shipping weight		kg	64/73	82/93	82/93
	Compressor type			Twin rotary	Twin rotary	Twin rotary
	Refrigerant type			R410A	R410A	R410A
	GWP			2088	2088	2088
	Refrigerant liquid pipe		mm	9.52	9.52	9.52
	Refrigerant gas pipe		mm	15.88	19.05	19.05
	Max pipe length		m	30	50	50
	Max drop between I.U.&O.U		m	20	30	30
	Refrigerant load in factory		kg	2.5	2.85	2.85
	Maximum pipe length without charge refrigerant		m	20	20	20
	Refrigerant charge quantity for extra length		g/m	45	45	45
Working temp.	Cooling(Min-Max)		°C	-10~46	-25~46	10~46
	Low ambient cooling(Min-Max) with compressor heater		°C	-25~46	-25~46	/
	Heating(Min-Max)		°C	-15~24	-15~24	-15~24

Model			Indoor unit	AD48HS1ERA(S)	AD48HS1ERA(S)	AD60HS1ERA(S)	AD60HS1ERA(S)
			Outoor unit	1U48LS1ERA(S)	1U48LS1ERB(S)	1U60IS2ERB(S)	1U60IS1ERB(S)*
Nominal performance data	Capacity	Nominal cooling	Btu/h	42650	42650	46400	52900
			kW(min-max)	12.5(6.0-14.5)	12.5(6.0-14.5)	13.6(6.0-15.0)	15.5(4.0-16.0)
		Nominal heating	Btu/h	48100	48100	52850	56300
			kW(min-max)	14.1(6.0-16.5)	14.1(6.0-16.5)	15.5(6.0-17.5)	16.5(4.0-18.0)
	Rated power input	Cooling	kW(min-max)	4.40(2.0-6.0)	4.40(2.0-6.0)	4.22(2.0-6.0)	5.13(2.0-6.5)
		Heating	kW(min-max)	3.90(2.0-6.0)	3.90(2.0-6.0)	4.21(2.0-6.0)	4.57(2.0-6.5)
	EER/COP			2.84/3.62	2.84/3.62	3.22/3.68	3.02/3.61
Seasonal performance data	Cooling P design(35°C)		kW	12.5	12.5	/	/
	Heating P design(-10°C)		kW	9	9	/	/
	SEER/SCOP			5.1/3.4	5.1/3.4	/	/
	Energy class(Cooling/Heating)			A/A	A/A	/	/
	Annual energy consumption(Cooling)		kW	/	/	/	/
	Annual energy consumption(Heating)		kW	/	/	/	/
Indoor unit							
Electrical parameters	Power supply		Ph/V/Hz	1/220~230/50/60	1/220~230/50/60	1/220~230/50/60	1/220~230/50/60
Performance	Air flow(H/M/L)		m^3/h	2580/2070/1560	2580/2070/1560	2580/2070/1560	2580/2070/1560
	External static pressure		Pa	50-150	50-150	50-150	50-150
	Sound power level(H/M/L)		dB(A)	65	65	65	65
	Sound pressure level(H/M/L)		dB(A)	45/41/37	45/41/37	45/41/37	45/41/37
Installation	External dimensions(W/D/H)		mm	1197/830/360	1197/830/360	1197/830/360	1197/830/360
	Shipping dimensions(W/D/H)		mm	1378/938/405	1378/938/405	1378/938/405	1378/938/405
	Net/Shipping weight		kg	68/75	68/75	68/75	68/75
	Controller		Standard	YR-E17	YR-E17	YR-E17	YR-E17
			Option	Please refer to control system in page 131			
Outdoor unit							
Electrical parameters	Power supply		Ph/V/Hz	1/220~230/50/60	3/380~400/50	3/380~400/50	3/380~400/50/60
Performance	Air flow (H)		m^3/h	4200	4200	6000	6500
	Sound power level		dB(A)	73	73	73	74
	Sound pressure level		dB(A)	59	59	60	61
Installation	External dimensions(W/D/H)		mm	1008/410/830	1008/410/830	948/340/1250	948/340/1250
	Shipping dimensions(W/D/H)		mm	1142/498/1000	1142/498/1000	1095/410/1400	1095/410/1400
	Net/Shipping weight		kg	82/93	82/93	91/101	96/106
	Compressor type			Twin rotary	Twin rotary	Twin rotary	Twin rotary
	Refrigerant type			R410A	R410A	R410A	R410A
	GWP			2088	2088	2088	2088
	Refrigerant liquid pipe		mm	9.52	9.52	9.52	9.52
	Refrigerant gas pipe		mm	19.05	19.05	19.05	19.05
	Max pipe length		m	50	50	50	50
	Max drop between I.U.&O.U		m	30	30	30	30
	Refrigerant load in factory		kg	2.85	2.85	3.3	3.3
	Maximum pipe length without charge refrigerant		m	20	20	20	20
	Refrigerant charge quantity for extra length		g/m	45	45	45	45
Working temp.	Cooling(Min-Max)		°C	-25~46	10~46	10~46	-25~46*
	Low ambient cooling(Min-Max) with compressor heater		°C	-25~46	/	/	-25~46*
	Heating(Min-Max)		°C	-15~24	-15~24	-15~24	-15~24

*Data is pending

CABINET TYPE

Stylish Design

Side air inlet

Different from downside air inlet, the downside panel is new flat screen appearance with side air inlet grill, make the grill easy clean and low sound level.

Information screen

Informaton such like mode, temperature, fan speed can be checked easily by information screen

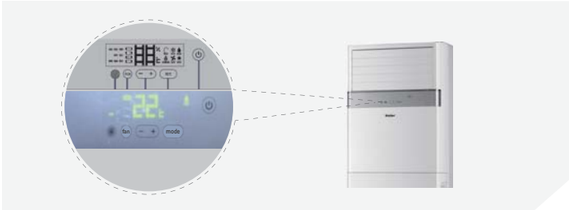

Comfort

15m Long distance airflow

According to the requirement of office room and large parlor, 15m long distance.

Comfort

Wide angle 160° air supply

Rounding 3-dimensional, 160 wide angle air sending, reach every corner of the room.

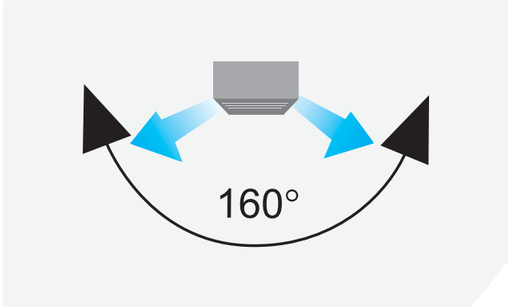

3D airflow

The cabinet type adopts two stepping motors to combines vertical and horizontal auto-swing to circulate cool/warm air to the every corner of the room.

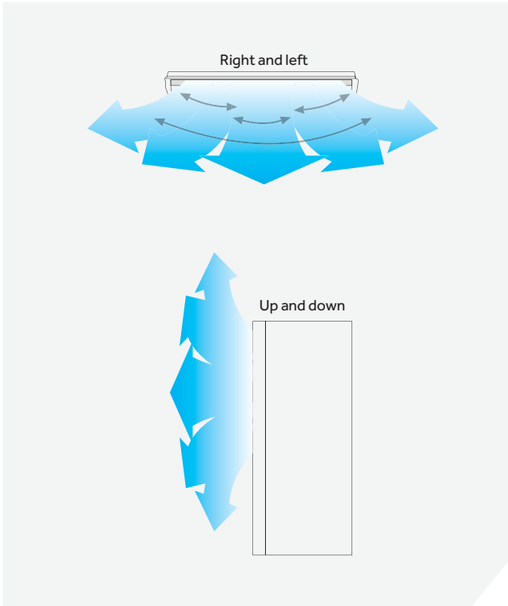

Health

High efficiency air purify filter

High efficiency air purify filter effectively prevents the smaller dust articles, insects and other materials.

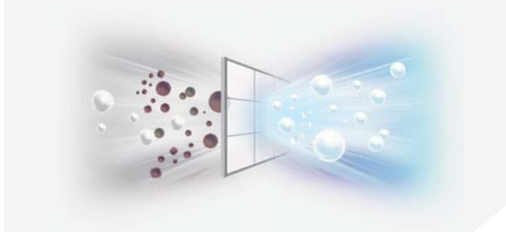

Reliability

Reliable protect

The system has many protect functions to achieve reliable running:High-pressure protection;Low-pressure protection;Phase protection;Over-current protection.

Child lock

After you set this function, the working status can not be changed either by the remote controller or the touch screen, unless this setting is cancelled.

CABINET TYPE

EUROVENT CERTIFIED PERFORMANCE

AP48DS1ERA(S)

48K

YR-HD

48K

DC INVERTER 180° sine wave | Sleep mode | Group control | Central control | BMS | On-Off card | Premium filter | Evaporator self-Cleaning | Quiet operation | Left & Right airflow | Far distance air supplying | 3D auto airflow | Auto mode | AUTO Auto-swing

DRY DRY function | Super match | 24 hours timer | Auto restart | Smart defrosting | Child lock | Double 8 display | -10°C cooling | Self-diagnosis function | 3 min 3 minutes protection

Model			Indoor unit	AP48DS1ERA(S)	AP48DS1ERA(S)
			Outoor unit	1U48LS1ERA(S)	1U48LS1ERB(S)
Nominal performance data	Capacity	Nominal cooling	Btu/h	41300	41300
			kW(min-max)	12.1(6.0~14.5)	12.5(6.0~14.5)
		Nominal heating	Btu/h	44350	44350
			kW(min-max)	13.5(6.0~16.5)	13.0(6.0~16.5)
	Rated power input	Cooling	kW(min-max)	4.02(2.0~6.0)	3.89(2.0~6.0)
		Heating	kW(min-max)	4.20(2.0~6.0)	4.05(2.0~6.0)
	EER/COP			3.01/3.21	3.21/3.21
Seasonal performance data	Cooling P design(35°C)		kW	12.1	12.1
	Heating P design(-10°C)		kW	9	9
	SEER/SCOP			5.1/3.4	5.1/3.4
	Energy class(Cooling/Heating)			A/A	A/A
	Annual energy consumption(Cooling)		kW	/	/
	Annual energy consumption(Heating)		kW	/	/
Indoor unit					
Electrical parameters	Power supply		Ph/V/Hz	1/220~230/50	1/220~230/50
Performance	Air flow(H/M/L)		m^3/h	1750/1500/1350	1750/1500/1350
	Sound power level(H/M/L)		dB(A)	68	68
	Sound pressure level(H/M/L)		dB(A)	53/50/47	53/50/47
Installation	External dimensions(W/D/H)		mm	1824/529/380	1824/529/380
	Shipping dimensions(W/D/H)		mm	1965/625/465	1965/625/465
	Net/Shipping weight		kg	55/62	55/62
	Controller		Standard	YR-HD	YR-HD
			Option	Please refer to control system in page 131	
Outdoor unit					
Electrical parameters	Power supply		Ph/V/Hz	1/220~230/50/60	3/380~400/50
Performance	Air flow (H)		m^3/h	4200	4200
	Sound power level		dB(A)	73	73
	Sound pressure level		dB(A)	59	59
Installation	External dimensions(W/D/H)		mm	1008/410/830	1008/410/830
	Shipping dimensions(W/D/H)		mm	1142/498/1000	1142/498/1000
	Net/Shipping weight		kg	82/93	82/93
	Compressor type			Twin rotary	Twin rotary
	Refrigerant type			R410A	R410A
	GWP			2088	2088
	Refrigerant liquid pipe		mm	9.52	9.52
	Refrigerant gas pipe		mm	19.05	19.05
	Max pipe length		m	50	50
	Max drop between I.U.&O.U		m	30	30
	Refrigerant load in factory		kg	2.85	2.85
	Maximum pipe length without charge refrigerant		m	20	20
	Refrigerant charge quantity for extra length		g/m	45	45
Working temp.	Cooling(Min~Max)		˚C	-25~46	10~46
	Low ambient cooling(Min~Max) with compressor heater		˚C	-25~46	/
	Heating(Min~Max)		˚C	-15~24	-15~24

EUROVENT CERTIFIED PERFORMANCE

AP48KS1ERA(S) **AP60KS1ERA(S)**

48k

60k

YR-HD

48,60K

DC INVERTER 180° sine wave | Sleep mode | Group control | Central control | BMS | On-Off card | Premium filter | Evaporator self-Cleaning | Quiet operation | Left & Right airflow | Far distance air supplying | 3D auto airflow | Auto mode | AUTO Auto-swing

DRY DRY function | Super match | 24 hours timer | Auto restart | Smart defrosting | Child lock | Double 8 display | -10°C cooling | Self-diagnosis function | 3 min 3 minutes protection

Model			Indoor unit	AP48KS1ERA(S)	AP48KS1ERA(S)	AP60KS1ERA(S)	AP60KS1ERA(S)
			Outoor unit	1U48LS1ERA(S)	1U48LS1ERB(S)	1U60IS2ERB(S)	1U60IS1ERB(S)*
Nominal performance data	Capacity	Nominal cooling	Btu/h	42650	42650	46400	52900
			kW(min-max)	12.5(6.0~14.5)	12.5(6.0~14.5)	13.6(6.0~14.5)	15.5(4.0~16.0)
		Nominal heating	Btu/h	44350	44350	52850	56300
			kW(min-max)	13.0(6.0~16.5)	13.0(6.0~16.5)	15.5(6.0~16.5)	16.5(4.0~18.0)
	Rated power input	Cooling	kW(min-max)	3.90(2.0~6.0)	3.89(2.0~6.0)	4.24(2.0~6.5)	5.13(2.0~6.5)
		Heating	kW(min-max)	4.05(2.0~6.0)	4.05(2.0~6.0)	4.29(2.0~6.5)	5.14(2.0~6.5)
	EER/COP			3.21/3.21	3.21/3.21	3.21/3.61	3.02/3.21
Seasonal performance data	Cooling P design(35°C)		kW	12.5	12.5	/	/
	Heating P design(-10°C)		kW	9	9	/	/
	SEER/SCOP			5.1/3.4	5.1/3.4	/	/
	Energy class(Cooling/Heating)			A/A	/	/	B/C
	Annual energy consumption(Cooling)		kW	/	/	/	/
	Annual energy consumption(Heating)		kW	/	/	/	/
Indoor unit							
Electrical parameters	Power supply		Ph/V/Hz	1/220~230/50/60	1/220~230/50/60	1/220~230/50/60	1/220~230/50/60
Performance	Air flow(H/M/L)		m^3/h	1750/1500/1350	1750/1500/1350	1750/1500/1350	1750/1500/1350
	Sound power level(H/M/L)		dB(A)	69	69	69	69
	Sound pressure level(H/M/L)		dB(A)	54/51/48	54/51/48	54/51/48	54/51/48
Installation	External dimensions(W/D/H)		mm	1850/600/350	1850/600/350	1850/600/350	1850/600/350
	Shipping dimensions(W/D/H)		mm	1986/691/415	1986/691/415	1986/691/415	1986/691/415
	Net/Shipping weight		kg	57/65	57/65	57/65	57/65
	Controller		Standard	YR-HD	YR-HD	YR-HD	YR-HD
			Option	Please refer to control system in page 131			
Outdoor unit							
Electrical parameters	Power supply		Ph/V/Hz	1/220~230/50/60	3/380~400/50	3/380~400/50	3/380~400/50/60
Performance	Air flow (H)		m^3/h	4200	4200	6000	6500
	Sound power level		dB(A)	73	73	73	74
	Sound pressure level		dB(A)	59	59	60	61
Installation	External dimensions(W/D/H)		mm	1008/410/830	1008/410/830	948/340/1250	948/340/1250
	Shipping dimensions(W/D/H)		mm	1142/498/1000	1142/498/1000	1095/410/1400	1095/410/1400
	Net/Shipping weight		kg	82/93	82/93	91/101	96/106
	Compressor type			Twin rotary	Twin rotary	Twin rotary	Twin rotary
	Refrigerant type			R410A	R410A	R410A	R410A
	GWP			2088	2088	2088	2088
	Refrigerant liquid pipe		mm	9.52	9.52	9.52	9.52
	Refrigerant gas pipe		mm	19.05	19.05	19.05	19.05
	Max pipe length		m	50	50	50	50
	Max drop between I.U.&O.U		m	30	30	30	30
	Refrigerant load in factory		kg	2.85	2.85	3.3	3.3
	Maximum pipe length without charge refrigerant		m	20	20	20	20
	Refrigerant charge quantity for extra length		g/m	45	45	45	45
Working temp.	Cooling(Min~Max)		˚C	-25~46	10~46	10~46	-25~46*
	Low ambient cooling(Min~Max) with compressor heater		˚C	-25~46	/	/	-25~46*
	Heating(Min~Max)		˚C	-15~24	-15~24	-15~24	-15~24

*Data is pending

SUPER MATCH
Maxi Split

MAXI SPLIT

Various Solution

What is maxi split ?

The maxi split is that outdoor unit connect with 2/3/4 same model indoor units to realize comfortable air flow with all indoor units turning on or off all in the same time.

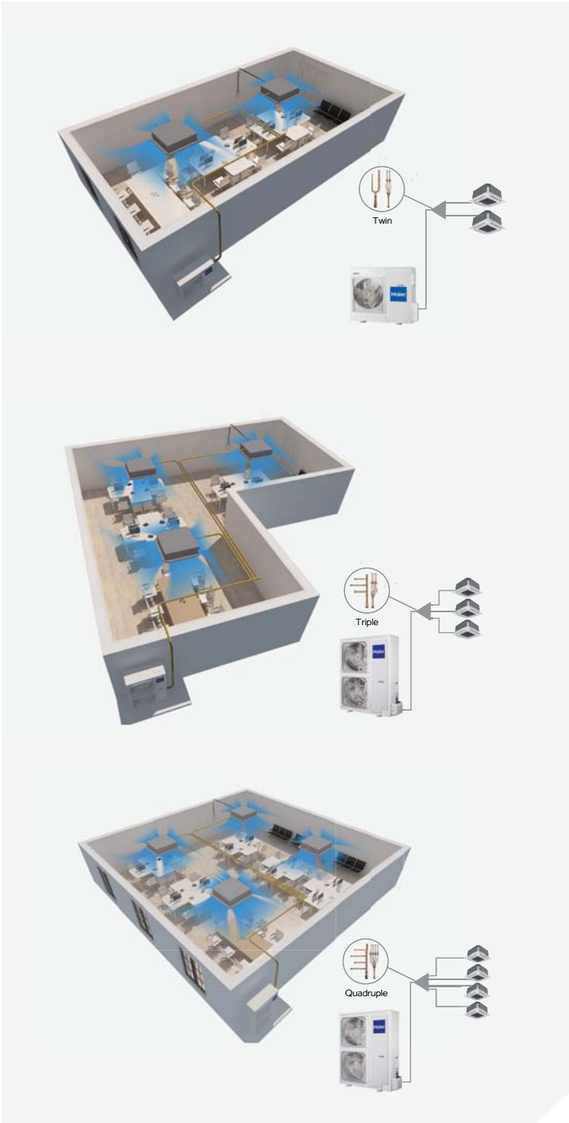

Easy Installation

Easy pipe connection

Maxi split pipe conncetion takes flared way, not the traditional welding way, easier for installation work.

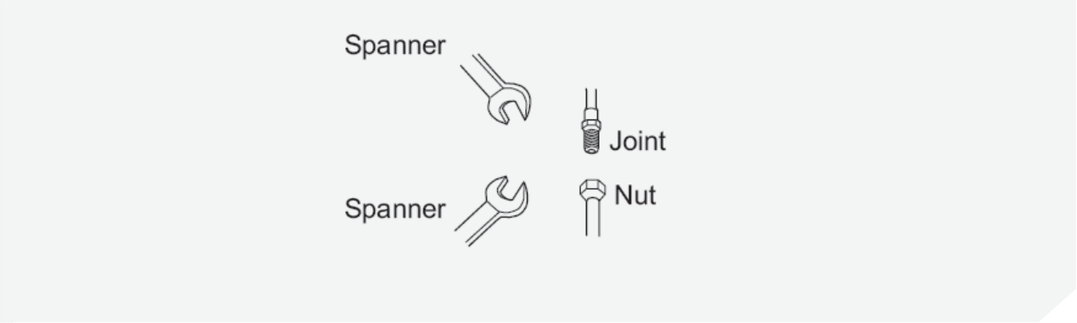

No need to set address

No matter indoor units are 2 /3/4 pieces in the system, installer don' t need to set address in indoor units, master indoor unit will be programmed automatically, all other indoor units automatic become salve indoor units.

Easy controls

User can choose different control way according to their needs,Maxi split can provide wired control, wifi control , group control, central control,BMS control.

MAXI SPLIT

MATCH TABLE

MAXI SPLIT MATCH TABLE(TWIN,TRIPLE,QUADRUPLE SPLIT)

Outdoor Unit Model	Capacity(kW)	Twin	Triple	Quadruple
1U36HS1ERA(S)	10	2*18k	3*12k	/
1U48LS1ERA(S)	12.5	2*24k	3*18k	4*12k
1U48LS1ERB(S)	12.5	2*24k	3*18k	4*12k
1U60IS2ERB(S)	14	2*24k	3*18k	4*12k

BRANCH PIPE TABLE

BRANCH PIPE MODEL	FOR WHAT COMBINATION	QUANTITY TO USE	WHICH OUTDOOR UNIT TO USE
FQG-2Y100A	Twin	1	1U36
FQG-3Y100A	Triple	1	1U36
FQG-2Y200A	Twin	1	1U48/1U60
FQG-3Y200A	Triple	1	1U48/1U60
FQG-4Y200A	Quadruple	1	1U48/1U60

MAXI SPLIT OUTDOOR UNIT

KBTU/h	36	48	60
Series kW	10	12.5	14
Inverter outdoor unit 1/220/50/60	1U36HS1ERA(S)	1U48LS1ERA(S)	
Inverter outdoor unit 3/380/50		1U48LS1ERB(S)	1U60IS2ERB(S)

MAXI SPLIT INDOOR UNIT

KBTU/h	12	18	24
Series kW	3.5	5	7.1
Compact Cassette	✓ AB12CS2ERA(S)	✓ AB18CS2ERA(S)	
Cassette			✓ AB24ES1ERA(S)
Convertible	✓ AC12CS1ERA(S)	✓ AC18CS1ERA(S)	✓ AC24CS1ERA(S)

MAXI SPLIT

MAXI SPLIT OUTDOOR SPECIFICATION

Model		1U36HS1ERA(S)	1U48LS1ERA(S)	1U48LS1ERB(S)	1U60IS2ERB(S)
External dimensions (W/D/H)	mm	948/340/840	1008/410/830	1008/410/830	948/340/1250
Net weight	kg	65	82	82	91
Sound pressure level	dB(A)	58	59	59	60
Sound power level	dB(A)	69	/	/	/
Cooling (Min~Max)	℃	-10~46	-10~46	-10~46	-10~46
Heating (Min~Max)	℃	-15~24	-15~24	-15~24	-15~24
Max drop between I.U.&O.U	m	20	30	30	30
Max drop between I.U.&I.U	m	0.5	0.5	0.5	0.5
Total pipe length	m	50	60	60	60
Power supply	Ph/V/Hz	1/220-240/50/60	1/220-240/50/60	3/380-415/50	3/380-415/50

MAXI SPLIT INDOOR SPECIFICATION

Model		AB12CS2ERA(S)	AB18CS2ERA(S)	AB24ES1ERA(S)
External dimensions(W/D/H)	mm	570/570/260	570/570/260	840/840/240
Net/Shipping weight	kg	18.5	18.5	25.5
Sound power level(H/M/L)	dB(A)	52	57	61
Sound pressure level(H/M/L)	dB(A)	35/31/27/23	40/35/33/29	44/40/36
Air flow(H/M/L)	m^3/h	620/520/450/350	700/620/500/400	1300/1100/870
Refrigerant liquid pipe	mm	6.35	6.35	9.52
Refrigerant gas pipe	mm	9.52	12.7	15.88

Model		AC12CS1ERA(S)	AC18CS1ERA(S)	AC24CS1ERA(S)
External dimensions(W/D/H)	mm	990/655/199	990/655/199	990/655/199
Net weight	kg	26.3	28.3	28.3
Sound power level(H/M/L)	dB(A)	58	62	62
Sound pressure level(H/M/L)	dB(A)	41/36/31	44/42/39	44/42/39
Air flow(H/M/L)	m^3/h	650/550/450	800/720/650	800/720/650
Refrigerant liquid pipe	mm	6.35	6.35	9.52
Refrigerant gas pipe	mm	9.52	12.7	15.88

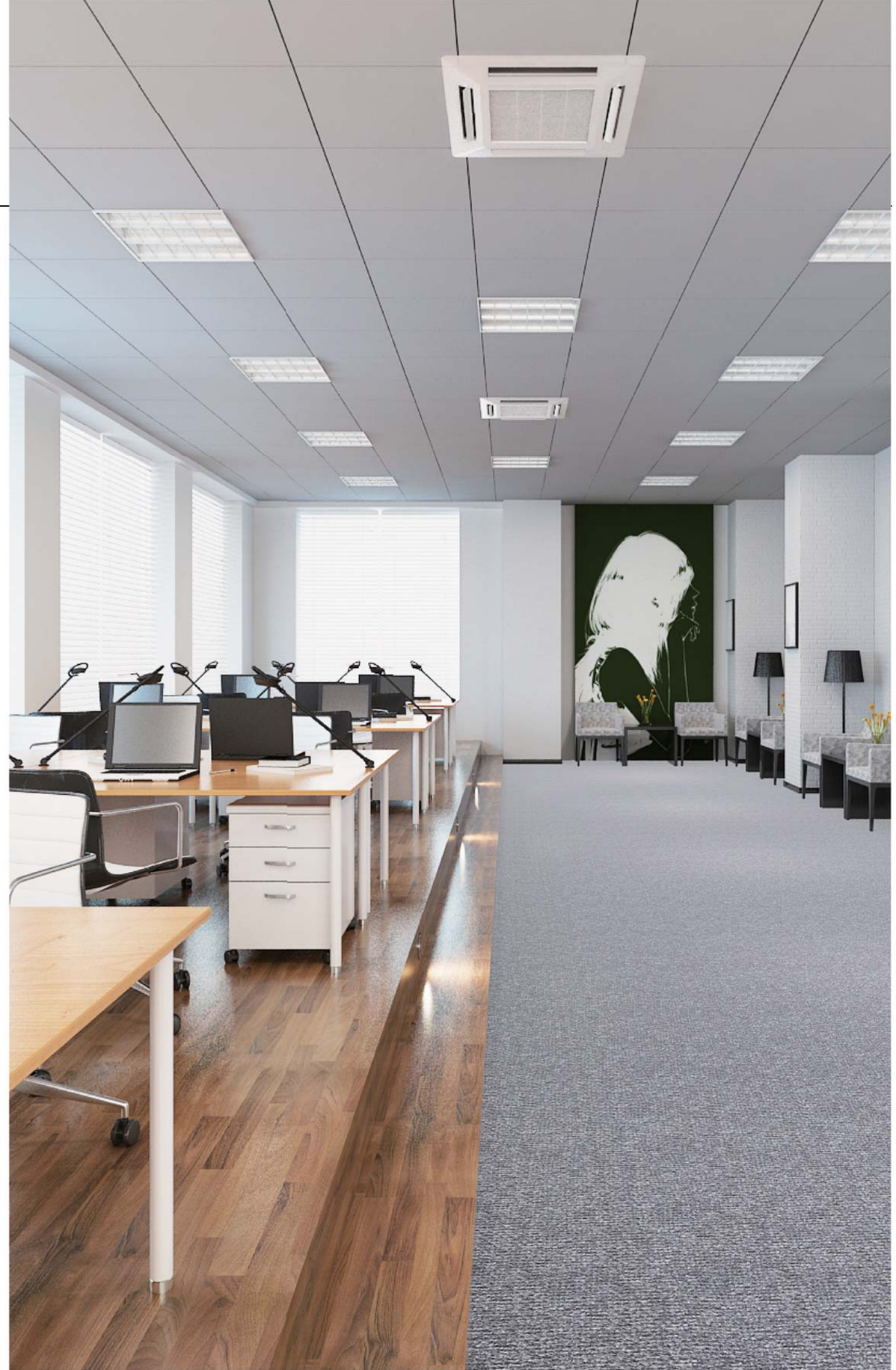

SUPER MATCH
SUPER MATCH MULTI

| 71 Models Line-up
| 73 Benefits
| 81 Key Feature
| 85 Outdoor Models
| 87 Nebula Series
| 88 Breeza Series
| 89 Console Series
| 90 Cassette Series
| 91 Convertible Series
| 92 Slim Low ESP Duct
| 94 Low ESP Duct
| 95 Medium ESP Duct
| 97 Match Table

MODELS LINE-UP

EUROVENT CERTIFIED PERFORMANCE

Indoor unit series		7000 Btu/h	9000 Btu/h		12000 Btu/h	15000 Btu/h	18000 Btu/h	24000 Btu/h
Nebula series		AS07NS1HRA-WU AS07NS1HRA-GU	AS09NS1HRA-WU AS09NS1HRA-GU		AS12NS1HRA-WU AS12NS1HRA-GU	AS15NS1HRA-WU AS15NS1HRA-GU	AS18NS1HRA-WU AS18NS1HRA-GU	AS24NS1HRA-WU AS24NS1HRA-GU
Breeza series		AS07BS4HRA	AS09BS4HRA		AS12BS4HRA	AS15BS4HRA	AS18BS4HRA	AS24BS4HRA
Console series			AF09AS1ERA		AF12AS1ERA			
Cassette			AB09CS2ERA		AB12CS2ERA(S)		AB18CS2ERA(S)	AB24ES1ERA(S)
Convertible					AC12CS1ERA(S)		AC18CS1ERA(S)	AC24CS1ERA(S)
Slim low ESP duct			AD09SS1ERA(N)		AD12SS1ERA(N)		AD18SS1ERA(N)	AD24SS1ERA(N)
Low ESP duct			AD09LS1ERA		AD12LS1ERA		AD18LS1ERA	AD24LS1ERA
Medium ESP duct					AD12MS1ERA		AD18MS1ERA	AD24MS2ERA

Outdoor unit series	14000 Btu/h - 4.1 kW	18000 Btu/h - 5.1 kW	19000 Btu/h - 5.4 kW		24000 Btu/h - 6.8 kW	26000 Btu/h - 7.6 kW	30000 Btu/h - 8.8 kW	34000 Btu/h - 10 kW	45000 Btu/h - 12.2 kW
	2U14CS2ERA(S) 1:2	2U18FS2ERA(S) 1:2	3U19FS1ERA(N) 1:3		3U24GS1ERA(N) 1:3	4U26HS1ERA 1:4	4U30HS1ERA 1:4	5U34HS1ERA 1:5	5U45LS1ERA 1:5

BENEFITS

SuperMatch

SERIES	MODEL	HEALTH										INTELLIGENT&COMFORT												
		Nano-aqua	Negative ion	RCD healthy module	Bacteria-killin medium	Photocatalyst filter	ESF filter	Vitamin C layer	Anti-mold filter	Negative ion filter	Evaporator self-cleaning	Super quiet	DIY auto mode	Wi-Fi control	Auto mode	Quiet mode	Power mode	On-Off card	Comfortable sleep	Left & Right airflow	3D airflow	Intelligent air	3D big flap	Carpet airflow
Nebula series	AS07NS1HRA-WU AS07NS1HRA-GU				√	√	√		√	√	√	√		√	√	√	√	√	√			√		
	AS09NS1HRA-WU AS09NS1HRA-GU				√	√	√		√	√	√	√		√	√	√	√	√	√			√		
	AS12NS1HRA-WU AS12NS1HRA-GU				√	√	√		√	√	√	√		√	√	√	√	√	√			√		
	AS15NS1HRA-WU AS15NS1HRA-GU				√	√	√		√	√	√	√		√	√	√	√	√	√			√		
	AS18NS1HRA-WU AS18NS1HRA-GU				√	√	√		√	√	√	√		√	√	√	√	√	√			√		
	AS24NS1HRA-WU AS24NS1HRA-GU				√	√	√		√	√	√	√		√	√	√	√	√	√			√		
Breeza series	AS07BS4HRA				√	√	√		√	√	√	√		√	√	√	√	√	√			√		
	AS09BS4HRA				√	√	√		√	√	√	√		√	√	√	√	√	√			√		
	AS12BS4HRA				√	√	√		√	√	√	√		√	√	√	√	√	√			√		
	AS15BS4HRA				√	√	√		√	√	√	√		√	√	√	√	√	√			√		
	AS18BS4HRA				√	√	√		√	√	√	√		√	√	√	√	√	√			√		
	AS24BS4HRA				√	√	√		√	√	√	√		√	√	√	√	√	√			√		
Console series	AF09AS1ERA				√	√	√		√	√	√	√			√	√	√		√			√		√
	AF12AS1ERA				√	√	√		√	√	√	√			√	√	√		√			√		√

√ : Standard √ : Optional

BENEFITS

SERIES	MODEL	CONVENIENT			DESIGN							DESIGN										ENERGY SAVING		
		Auto restart	3 minutes protection	24 hours timer	Super match	Original 3D-cantilfting panel	Compact design	Integral stop valve cover	Easy clean design	Base pan & drain pan integrative design		Quick & easy installation	2 ways drain piping connection	Blue fin	Golden fin	High quality element	LED display	"DOUBLE 8" display	Large "DOUBLE 8" LED display	6-color LED display	Consealed LED display	DC motor	High performance compressor	180° sine wave DC inverter
Nebula series	AS07NS1HRA-WU AS07NS1HRA-GU	√	√	√	√									√	√	√	√	√			√		√	√
	AS09NS1HRA-WU AS09NS1HRA-GU	√	√	√	√									√	√	√	√	√			√		√	√
	AS12NS1HRA-WU AS12NS1HRA-GU	√	√	√	√									√	√	√	√	√			√		√	√
	AS15NS1HRA-WU AS15NS1HRA-GU	√	√	√	√									√	√	√	√	√			√		√	√
	AS18NS1HRA-WU AS18NS1HRA-GU	√	√	√	√									√	√	√	√	√			√		√	√
	AS24NS1HRA-WU AS24NS1HRA-GU	√	√	√	√									√	√	√	√	√			√		√	√
Breeza series	AS07BS4HRA	√	√	√	√									√	√	√	√	√			√		√	√
	AS09BS4HRA	√	√	√	√									√	√	√	√	√			√		√	√
	AS12BS4HRA	√	√	√	√									√	√	√	√	√			√		√	√
	AS15BS4HRA	√	√	√	√									√	√	√	√	√			√		√	√
	AS18BS4HRA	√	√	√	√									√	√	√	√	√			√		√	√
	AS24BS4HRA	√	√	√	√									√	√	√	√	√			√		√	√
Console series	AF09AS1ERA	√	√	√	√									√	√	√		√					√	√
	AF12AS1ERA	√	√	√	√									√	√	√		√					√	√

√ : Standard √ : Optional

BENEFITS

SuperMatch

SERIES	MODEL	ENERGY SAVING				SMART								HEALTH		COMFORT												
		DC INVERTER 180° sine wave DC inverter	DC motor	A++ Energy class A++	Sleep mode	WIFI Wi-Fi control	Group control Group controller	Central control Central control	BMS BMS	On-Off card	Move eye intelligent system	Fresh air channel		Premium filter	Evaporator self-cleaning	Super quiet	Quiet operation	Low noise	Left & Right airflow	Far distance air supplying	360°airflow	4-way airflow	3D auto airflow	Wide-angle airflow	4 way independent airflow	Auto mode	AUTO Auto-swing	DRY DRY function
Cassette type	AB09CS2ERA(S)	√	√	√	√	√	√	√	√	√		√		√	√		√					√				√	√	√
	AB12CS2ERA(S)	√	√	√	√	√	√	√	√	√		√		√	√		√					√				√	√	√
	AB18CS2ERA(S)	√	√	√	√	√	√	√	√	√		√		√	√		√					√				√	√	√
	AB24ES1ERA(S)	√		√	√	√	√	√	√	√				√	√		√					√				√	√	√
Convertible type	AC12CS1ERA(S)	√		√	√	√	√	√	√	√				√	√		√		√				√			√	√	√
	AC18CS1ERA(S)	√		√	√	√	√	√	√	√				√	√		√		√				√			√	√	√
	AC24CS1ERA(S)	√		√	√	√	√	√	√	√				√	√		√		√				√			√	√	√
Slim duct type	AD09SS1ERA(N)	√	√	√	√	√	√	√	√	√				√	√	√	√		√				√			√	√	√
	AD12SS1ERA(N)	√	√	√	√	√	√	√	√	√				√	√	√	√		√				√			√	√	√
	AD18SS1ERA(N)	√	√	√	√	√	√	√	√	√				√	√	√	√		√				√			√	√	√
	AD24SS1ERA(N)	√	√	√	√	√	√	√	√	√				√	√	√	√		√				√			√	√	√
Low ESP duct type	AD09LS1ERA	√		√	√	√	√	√	√	√				√	√		√									√	√	√
	AD12LS1ERA	√		√	√	√	√	√	√	√				√	√		√									√	√	√
	AD18LS1ERA	√		√	√	√	√	√	√	√				√	√		√									√	√	√
	AD24LS1ERA	√		√	√	√	√	√	√	√				√	√		√									√	√	√
Medium ESP duct type	AD12MS1ERA	√	√	√	√	√	√	√	√	√		√		√	√	√	√									√	√	√
	AD18MS1ERA	√	√	√	√	√	√	√	√	√		√		√	√	√	√									√	√	√
	AD24MS2ERA	√	√	√	√	√	√	√	√	√		√		√	√		√									√	√	√

√ : Standard √ : Optional

BENEFITS

SuperMatch

SERIES	MODEL	CONVENIENCE										CONVENIENCE							RELIABILITY					
		Super match	Weekly timer	24 hours timer	Auto restart	Smart defrosting	Child lock	Double 8 display	4 fan settings	Adjustable E.S.P		Two-way drain	Drain water pump	Branch outlet	Quickinsllation	Compact design	Built-in valve	Widely electricity Hz	-15°C heating	-20°C heating	-10°C cooling	-15°C cooling	Self-diagnosis function	3 minutes protection
Cassette type	AB09CS2ERA(S)	√	√	√	√	√	√		√				√			√		√	√		√		√	√
	AB12CS2ERA(S)	√	√	√	√	√	√		√				√			√		√	√		√		√	√
	AB18CS2ERA(S)	√	√	√	√	√	√		√				√			√		√	√		√		√	√
	AB24ES1ERA(S)	√	√	√	√	√	√						√	√		√		√	√		√		√	√
Convertible type	AC12CS1ERA(S)	√	√	√	√	√	√									√		√	√		√		√	√
	AC18CS1ERA(S)	√	√	√	√	√	√									√		√	√		√		√	√
	AC24CS1ERA(S)	√	√	√	√	√	√									√		√	√		√		√	√
Slim duct type	AD09SS1ERA(N)	√	√	√	√	√	√					√	√			√		√	√		√		√	√
	AD12SS1ERA(N)	√	√	√	√	√	√			√		√	√			√		√	√		√		√	√
	AD18SS1ERA(N)	√	√	√	√	√	√			√		√	√			√		√	√		√		√	√
	AD24SS1ERA(N)	√	√	√	√	√	√			√		√	√			√		√	√		√		√	√
Low ESP duct type	AD09LS1ERA	√	√	√	√	√	√			√		√						√	√		√		√	√
	AD12LS1ERA	√	√	√	√	√	√					√						√	√		√		√	√
	AD18LS1ERA	√	√	√	√	√	√					√						√	√		√		√	√
	AD24LS1ERA	√	√	√	√	√	√					√						√	√		√		√	√
Medium ESP duct type	AD12MS1ERA	√	√	√	√	√	√			√		√	√			√		√	√		√		√	√
	AD18MS1ERA	√	√	√	√	√	√			√		√	√			√		√	√		√		√	√
	AD24MS2ERA	√	√	√	√	√	√			√		√	√			√		√	√		√		√	√

√ : Standard √ : Optional

KEY FEATURE

EUROVENT CERTIFIED PERFORMANCE

High Efficiency & Comfortable

High efficiency

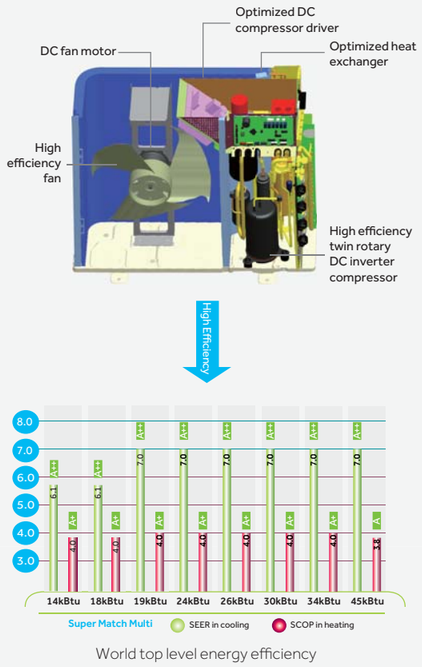

World top level energy efficiency

High Reliability

Oil return

For 1:3 to 1:5 outdoor unit models, Haier multi split outdoor unit system(3U19~5U45) takes oil separator design, compressor oil come back to compressor in time, so compressor running with oil, lower compressor wear possibility, boost system reliability.

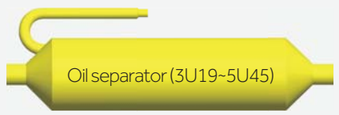

High Reliability

Electrical box ventilation

Electrical box design: reserved air path (1:3~1:5) good for ventilation, working temperature of electric box can be sufficiently reduced, lower electrical component malfunction rate, boost reliability.

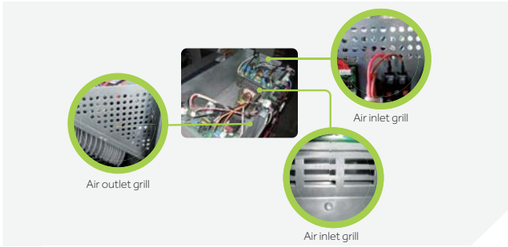

Control

High voltage communication wire guarantee the control not to be interfered by electromagnetic wave, boost control reliability.

Easy Stock & Easy Use, More User Friendly

Easy stock

The unified indoor units of multi split and single split can help our distributors and installers to reduce the inventory and save money.

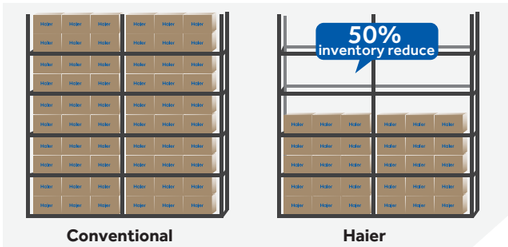

Easy Stock & Easy Use, More User Friendly

Easy control

The universal wireless controller for high wall, console, cassette, convertible, duct can be used for everyone easily.

Separate cool, heat, dry, quiet buttons easy to use!

Easy Installation, More User Friendly

Easy carry

In summer night the sound level can be reduced by PCB setting, lower sound level 3 dB (setting by installer on site).

Easy vacuum & charging

Vacuum and charging every indoor unit just one time from general stop valve (1:4 to1:5 outdoor unit).

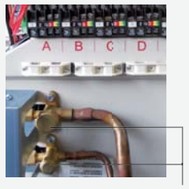

General stop valve

KEY FEATURE

EUROVENT CERTIFIED PERFORMANCE

Easy Installation, More User Friendly

Easy wiring

Wiring solution: Parallel connection, easy wiring.

Note: Red wire=power wire; Blue wire=communication wire; Black wire=pipe.

Easy piping

The piping from outdoor unit do not need to follow from bottom to top in new 5U45LS1ERA, become very flexible, because the new piping design make compressor oil go back to compressor by compressor power and gravity.

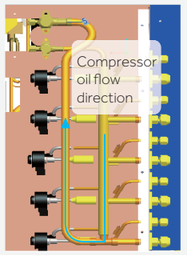

Service screen

In start up & maintenance, the service screen will show the failure code for easy understand to the problem.

Easy Installation, More User Friendly

One screw maintenance panel

New maintenance panel is fixed on the side panel, installer only take down the maintenance panel by take down only one screw, then to check the compressor running frequency and error code from the double 8 screen.

Easy start up & maintenance

Check valve(3U) or general stop valve (4U-5U) can be used in high/low pressure test in same mode, easy to start up and maintenance.

Wider Application

Wider installation

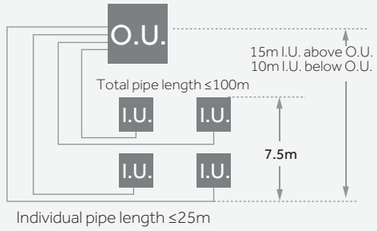

Wider range operation

Wider range operation of outside temperature

Cooling: from -10°C to 46°C

Heating: from -15°C to 24°C

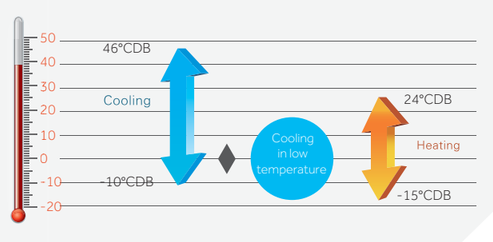

Wider frequency application

Equipped with various DC components, the new Multi system is applicable both for 50Hz and 60Hz electricity condition.

Wider voltage range

Working voltage: 208V~240V

The system is more tolerance in unstable voltage conditions.

OUTDOOR MODELS

EUROVENT CERTIFIED PERFORMANCE

2U14CS2ERA(S)
180° sine wave DC inverter 1:2

2U18FS2ERA(S)
180° sine wave DC inverter 1:2

3U19FS1ERA(N)
180° sine wave DC inverter 1:3

3U24GS1ERA(N)
180° sine wave DC inverter 1:3

High performance compressor | DC INVERTER 180° sine wave | DC motor | Super match | Sleep mode | Wide voltage | 3 min 3 minutes protection | -10℃ Low ambient cooling at -10℃

Model/Indoor unit				2U14CS2ERA(S)	2U18FS2ERA(S)	3U19FS1ERA(N)	3U24GS1ERA(N)
Indoor unit combinations				AS09BS4HRA+ AS12BS4HRA	2*AS12BS4HRA	3*AS09BS4HRA	3*AS09BS4HRA
Maximum connected quantity of indoor units				2	2	3	3
Nominal performance data	Capacity	Nominal cooling	Btu/h	14000	17400	18500	22850
			kW (min~max)	1.2/4.1/4.5	1.3/5.1/5.8	1.5/5.4/7	1.5/6.7/8.2
		Nominal heating	Btu/h	15000	19800	22200	27300
			kW (min~max)	1.5/4.4/5.0	1.9/5.8/6.6	1.8/6.5/8.1	1.8/8.0/9.0
	Rated power input	Cooling	kW (min~max)	0.29/1.07/1.4	0.35/1.54/2.07	0.5/1.32/2.6	0.55/1.68/3.1
		Heating	kW (min~max)	0.34/1.09/1.65	0.45/1.55/2.30	0.5/1.46/2.6	0.55/1.83/3.1
	EER/COP			3.83/4.03	3.31/3.74	4.1/4.46	4.0/4.38
Seasonal performance data	Cooling P design(35°C)		kW	4.1	5.1	5.4	6.7
	Heating P design(-10°C)		kW	4.2	5.2	4.5	5.3
	SEER/SCOP			6.1/4.0	6.1/4.0	7.0/4.0	7/4.0
	Energy class(Cooling/Heating)			A++/A+	A++/A+	A++/A+	A++/A+
	Annual energy consumption(Cooling)		kW	235	292	270	340
	Annual energy consumption(Heating)		kW	1471	1821	1600	1923
Outdoor unit							
Electrical parameters	Power supply		Ph/V/Hz	1/230/50	1/230/50	1/220~240/50/60	1/220~240/50/60
Performance	Air flow (H/M/L)		m^3/h	1900	2900	2000	2500
	Sound power level (H/M/L)		dB(A)	62	63	65	67
	Sound pressure level (H/M/L)		dB(A)	52	53	52	54
Installation	External dimensions (W/D/H)		mm	780/270/540	810/288/688	886/288/688	860/308/730
	Shipping dimensions (W/D/H)		mm	930/340/614	949/406/745	992/408/760	1005/423/815
	Net/Shipping weight		kg	34/37	43.5/46.5	51/ 53	53/56
	Compressor type			Rotary	Twin Rotary	Twin Rotary	Twin Rotary
	Refrigerant type			R410A	R410A	R410A	R410A
	Gwp			2088	2088	2088	2088
	Refrigerant liquid pipe		mm	2×6.35	2×6.35	3×6.35	3×6.35
	Refrigerant gas pipe		mm	2×9.52	2×9.52	3×9.52	3×9.52
	Total pipe length (Max)		m	30	30	50	60
	Single pipe length (Max)		m	20	20	25	25
	Max drop between I.U.&O.U		m	15	15	15	15
	Max drop between I.U.&I.U		m	15	15	5	5
	Refrigerant load in factory		kg	1.2	1.4	1.9	1.9
	Maximum pipe length without charge refrigerant		m	20	20	30	30
	Refrigerant charge quantity for extra length		g/m	20	20	20	20
Working temp.	Cooling(Min~Max)		°C	-10~46	-10~46	-10~46	-10~46
	Heating(Min~Max)		°C	-15~24	-15~24	-15~24	-15~24

OUTDOOR MODELS

EUROVENT CERTIFIED PERFORMANCE

4U26HS1ERA
180° sine wave DC inverter 1:4

4U30HS1ERA
180° sine wave DC inverter 1:4

5U34HS1ERA
180° sine wave DC inverter 1:5

5U45LS1ERA
180° sine wave DC inverter 1:5

High performance compressor | DC INVERTER 180° sine wave | DC motor | Super match | Sleep mode | Wide voltage | 3 min 3 minutes protection | -10℃ Low ambient cooling at -10℃

Model/Indoor unit				4U26HS1ERA	4U30HS1ERA	5U34HS1ERA	5U45LS1ERA
Indoor unit combinations				3*AS09BS4HRA	4*AS09BS4HRA	4*AS09BS4HRA	2*AD09SS1ERA(N)+ AD12SS1ERA(N)+AD18SS1ERA(N)
Maximum connected quantity of indoor units				4	4	5	5
Nominal performance data	Capacity	Nominal cooling	Btu/h	26000	30000	34100	41600
			kW (min~max)	1.5/7.6/9	1.5/8.8/9.8	1.5/10/11	1.5/12.2/13.4
		Nominal heating	Btu/h	29350	33450	36500	43300
			kW (min~max)	1.8/8.6/9.5	1.8/9.8/10.5	1.8/10.7/11.5	1.8/12.7/14.0
	Rated power input	Cooling	kW (min~max)	0.55/2.0/3.5	0.55/2.32/3.8	0.55/2.77/4.0	0.55/3.63/5.5
		Heating	kW (min~max)	0.55/2.18/3.5	0.55/2.39/3.8	0.55/2.68/4.0	0.55/3.25/5.5
	EER/COP			3.8/3.95	3.8/4.1	3.6/4	3.36/3.9
Seasonal performance data	Cooling P design(35°C)		kW	7.6	8.8	10	12.2
	Heating P design(-10°C)		kW	6.2	7.1	8.1	9
	SEER/SCOP			7.0/4.0	7.0/4.0	7/4.0	7.0/3.8
	Energy class(Cooling/Heating)			A++/A+	A++/A+	A++/A+	A++/A
	Annual energy consumption(Cooling)		kW	380	440	500	595
	Annual energy consumption(Heating)		kW	2308	2487	2836	3558
Outdoor unit							
Electrical parameters	Power supply		Ph/V/Hz	1/220~240/50/60	1/220~240/50/60	1/220~240/50/60	1/220~240/50/60
Performance	Air flow (H/M/L)		m^3/h	3500	3500	4000	4200
	Sound power level (H/M/L)		dB(A)	68	70	70	71
	Sound pressure level (H/M/L)		dB(A)	56	56	58	60
Installation	External dimensions (W/D/H)		mm	948/340/840	948/340/840	948/340/840	1008/447/830
	Shipping dimensions (W/D/H)		mm	1040/430/1000	1040/430/1000	1040/430/1000	1130/490/1000
	Net/Shipping weight		kg	74/85	76/87	77/88	90/101
	Compressor type			Twin Rotary	Twin Rotary	Twin Rotary	Twin Rotary
	Refrigerant type			R410A	R410A	R410A	R410A
	Gwp			2088	2088	2088	2088
	Refrigerant liquid pipe		mm	4×6.35	4×6.35	5×6.35	5×6.35
	Refrigerant gas pipe		mm	3×9.52+1×12.7	3×9.52+1×12.7	4×9.52+1×12.7	3×9.52+2×12.7
	Total pipe length (Max)		m	70	70	80	100
	Single pipe length (Max)		m	25	25	25	25
	Max drop between I.U.&O.U		m	15	15	15	15
	Max drop between I.U.&I.U		m	5	5	5	5
	refrigerant load in factory		kg	3.1	3.2	3.4	3.2
	Maximum pipe length without charge refrigerant		m	40	40	40	40
	refrigerant charge quantity for extra length		g/m	20	20	20	28
Working temp.	Cooling(Min~Max)		°C	-10~46	-10~46	-10~46	-10~46
	Heating(Min~Max)		°C	-15~24	-15~24	-15~24	-15~24

NEBULA SERIES

EUROVENT CERTIFIED PERFORMANCE

AS07NS1HRA-WU AS09NS1HRA-WU AS12NS1HRA-WU AS15NS1HRA-WU AS18NS1HRA-WU AS24NS1HRA-WU
AS07NS1HRA-GU AS09NS1HRA-GU AS12NS1HRA-GU AS15NS1HRA-GU AS18NS1HRA-GU AS24NS1HRA-GU

YR-HBS01

Super quiet 22dB(A)
Nano-aqua
3D airflow
Long distance air supplying
A-PAM inverter technology

Model/indoor unit			AS07NS1HRA-WU AS07NS1HRA-GU	AS09NS1HRA-WU AS09NS1HRA-GU	AS12NS1HRA-WU AS12NS1HRA-GU	AS15NS1HRA-WU AS15NS1HRA-GU	AS18NS1HRA-WU AS18NS1HRA-GU	AS24NS1HRA-WU AS24NS1HRA-GU
Capacity	Nominal cooling	Btu/h	6800	9210	12290	15010	17740	23890
		kW (min~max)	2	2.7(0.80~3.40)	3.6(1.00~4.20)	4.4(1.3~5.0)	5.2(1.30~6.80)	7.0(2.20~8.50)
	Nominal heating	Btu/h	7850	9560(4780~10920)	12630(4780~13990)	18430(4780~20480)	19790(5460~20480)	25600(8530~26620)
		kW (min~max)	2.3	2.8(1.00~4.60)	3.7(1.100~5.40)	5.4(1.4~6.0)	5.8(1.40~6.90)	7.5(2.40~9.80)
	Cooling P design (35°C)	kW	2.7	2.7	3.6	4.4	5.2	7
	Heating P design (-10°C)	kW	2.5	2.5	3.2	3.5	4.9	5.1
Electrical parameters	Power supply	Ph/V/Hz	1/230/50	1/230/50	1/230/50		1/230/50	1/230/50
Performance	Air flow(H/M/L)	m^3/h	600	600	650	700	900	1200
	Sound power level (H/M/L)	dB(A)	52	52	54	55	57	62
	Sound pressure level (H/M/L)	dB(A)	39/34/27/21	39/34/27/21	40/35/31/22	44/40/35/28	47/43/37/30	47/43/37/35
Installation	External dimensions (W/D/H)	mm	855/204/280	855/204/280	855/204/280	900/210/310	997/235/322	1115/248/336
	Shipping dimensions (W/D/H)	mm	954/279/355	954/279/355	954/279/355	991/313/399	1085/329/403	1205/341/416
	Net/Shipping weight	kg	10/12.2	10/12.2	10/12.2	11.5/14	13/16	16/19.6
	Refrigerant liquid pipe	mm	6.35	6.35	6.35	6.35	9.52	9.52
	Refrigerant gas pipe	mm	9.52	9.52	9.52	12.7	15.88	15.88
	Controller	Standard	YR-HBS01	YR-HBS01	YR-HBS01	YR-HBS01	YR-HBS01	YR-HBS01
		Option	Please refer to control system in page 131					

BREEZA SERIES

EUROVENT CERTIFIED PERFORMANCE

AS07BS4HRA AS09BS4HRA AS12BS4HRA
AS15BS4HRA AS18BS4HRA AS24BS4HRA

YR-HG

Super quiet 22dB(A)
Long distance air supplying
A-PAM inverter technology
UV ray

Model/indoor unit			AS07BS4HRA	AS09BS4HRA	AS12BS4HRA	AS15BS4HRA	AS18BS4HRA	AS24BS4HRA
Capacity	Nominal cooling	Btu/h	6800	9210	12290	15010	17740	23890
		kW (min~max)	2	2.7(0.80~3.40)	3.6(1.00~4.20)	4.4(1.3~5.0)	5.2(1.30~6.80)	7.0(2.20~8.50)
	Nominal heating	Btu/h	7850	9560(4780~10920)	12630(4780~13990)	18430(4780~20480)	19790(5460~20480)	25600(8530~26620)
		kW (min~max)	2.3	2.8(1.00~4.60)	3.7(1.100~5.40)	5.4(1.4~6.0)	5.8(1.40~6.90)	7.5(2.40~9.80)
	Cooling P design (35°C)	kW	2.7	2.7	3.6	4.4	5.2	7
	Heating P design (-10°C)	kW	2.5	2.5	3.2	3.5	4.9	5.1
Electrical parameters	Power supply	Ph/V/Hz	1/230/50	1/230/50	1/230/50		1/230/50	1/230/50
Performance	Air flow(H/M/L)	m^3/h	600	600	650	700	900	1200
	Sound power level (H/M/L)	dB(A)	52	52	54	55	57	62
	Sound pressure level (H/M/L)	dB(A)	39/34/27/21	39/34/27/21	40/35/31/22	44/40/35/28	47/43/37/30	47/43/37/35
Installation	External dimensions (W/D/H)	mm	855/204/280	855/204/280	855/204/280	900/210/310	997/235/322	1115/248/336
	Shipping dimensions (W/D/H)	mm	954/279/355	954/279/355	954/279/355	991/313/399	1085/329/403	1205/341/416
	Net/Shipping weight	kg	10/12.2	10/12.2	10/12.2	11.5/14	13/16	16/19.6
	Refrigerant liquid pipe	mm	6.35	6.35	6.35	6.35	9.52	9.52
	Refrigerant gas pipe	mm	9.52	9.52	9.52	12.7	15.88	15.88
	Controller	Standard	YR-HG	YR-HG	YR-HG	YR-HG	YR-HG	YR-HG
		Option	Please refer to control system in page 131					

CONSOLE SERIES

EUROVENT CERTIFIED PERFORMANCE

AF09AS1ERA **AF12AS1ERA**

YR-HD

- High efficiency filter
- Quiet running
- Compact design
- Blowing up and down

Model/indoor unit			AF09AS1ERA	AF12AS1ERA
Capacity	Nominal cooling	Btu/h	8500	12000
		kW (min~max)	2.5(1.3~3.0)	3.5(1.4~4.0)
	Nominal heating	Btu/h	9550	13000
		kW (min~max)	2.8(1.4~3.2)	3.80(1.4~4.1)
	Cooling P design (35°C)	kW	2.5	3.5
	Heating P design (-10°C)	kW	2.1	2.7
Electrical parameters	Power supply	Ph/V/Hz	1/230/50	1/230/50
Performance	Air flow(H/M/L)	m^3/h	450	500
	Sound power level (H/M/L)	dB(A)	53	54
	Sound pressure level (H/M/L)	dB(A)	39/35/30/26	40/36/32/28
Installation	External dimensions (W/D/H)	mm	720/253/640	720/253/640
	Shipping dimensions (W/D/H)	mm	784/305/719	784/305/719
	Net/Shipping weight	kg	17/19.5	17.5/20
	Refrigerant liquid pipe	mm	6.35	6.35
	Refrigerant gas pipe	mm	9.52	9.52
	Controller	Standard	YR-HD	YR-HD
		Option	Please refer to control system in page 131	

CASSETTE SERIES

EUROVENT CERTIFIED PERFORMANCE

AB09CS2ERA(S) **AB12CS2ERA(S)** **AB18CS2ERA(S)** **AB24ES1ERA(S)**

YR-HD

9,12,18K

- DC fan motor
- 700x700mm new panel design
- Pre-set fresh air inlet
- Built-in high head drain pump
- Quiet operation

24K

- Compact design
- Pre-set Fresh air inlet
- Built-in high head drain pump
- Reserve branch outlet

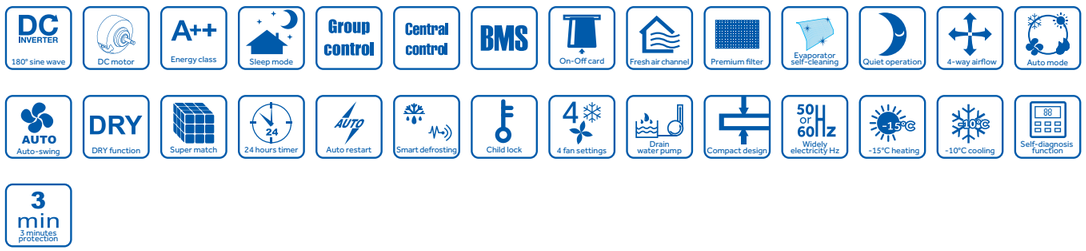

Model/indoor unit			AB09CS2ERA(S)	AB12CS2ERA(S)	AB18CS2ERA(S)	AB24ES1ERA(S)
Capacity	Nominal Cooling	Btu/h	8900	12000	17000	24200
		kW (min~max)	2.6	3.50(0.9~4.5)	5(1.8~5.8)	7.1(2~7.3)
	Nominal Heating	Btu/h	9900	12600	17750	24200
		kW (min~max)	2.9	3.7(1~4.8)	5.2(2~6.5)	7.1(2.5~8)
	Cooling P design(35°C)	kW	/	3.5	5	7.1
	Heating P design(-10°C)	kW	/	3.4	4.7	5.2
Electrical parameters	Power supply	Ph/V/Hz	1/220~230/50/60	1/220~230/50/60	1/220~230/50/60	1/220~230/50/60
Performance	Air flow(H/M/L)	m^3/h	700/620/520/450/350	700/620/520/450/350	780/700/620/500/400	1300/1100/870
	Sound power level(H/M/L)	dB(A)	52	52	57	59/57/52
	Sound pressure level(H/M/L)	dB(A)	42/40/36/32/28	42/40/36/32/28	44/42/37/35/31	46/44/39
Installation	External dimensions(W/D/H)	mm	570/570/260	570/570/260	570/570/260	840/840/240
	Shipping dimensions(W/D/H)	mm	718/680/380	718/680/380	718/680/380	930/930/330
	Net/Shipping weight	kg	17/20	18.5/22	18.5/22	25.5/30.5
	Refrigerant liquid pipe	mm	6.35	6.35	6.35	9.52
	Refrigerant gas pipe	mm	9.52	9.52	12.7	15.88
	Controller	Standard	YR-HD	YR-HD	YR-HD	YR-HD
		Option	Please refer to control system in page 131			
Panel	Model		PB-700IB	PB-700IB	PB-700IB	PB-950JB
	External dimensions (W/D/H)	mm	700/700/60	700/700/60	700/700/60	950/950/60
	Shipping dimensions (W/D/H)	mm	740/750/115	740/750/115	740/750/115	985/985/115
	Net/Shipping weight	kg	2.8/4.8	2.8/4.8	2.8/4.8	6.0/7.5

CONVERTIBLE SERIES

EUROVENT CERTIFIED PERFORMANCE

AC12CS1ERA(S) **AC18CS1ERA(S)** **AC24CS1ERA(S)**

12,18,24K

YR-HD

12,18,24K

- Flexible installation, on the floor or on the ceiling
- Ultra thin design, only 199mm thick
- Automatic horizontal and vertical swing
- Reserved fresh air inlet

Model/indoor unit			AC12CS1ERA(S)	AC18CS1ERA(S)	AC24CS1ERA(S)
Capacity	Nominal cooling	Btu/h	12000	17000	22200
		kW (min~max)	3.5(0.9~4.5)	5(1.8~5.8)	6.5(2~7.3)
	Nominal heating	Btu/h	13300	18800	24200
		kW (min~max)	3.9(1~4.8)	5.5(2~6.5)	7.1(2.5~8.0)
	Cooling P design (35°C)	kW	3.5	5	6.5
	Heating P design (-10°C)	kW	3.4	4.7	5.2
Electrical parameters	Power supply	Ph/V/Hz	1/220~230/50/60	1/220~230/50/60	1/220~230/50/60
Performance	Air flow(H/M/L)	m^3/h	650/550/450	800/720/650	850/800/720
	Sound power level (H/M/L)	dB(A)	57/54/49	61/59/57	61/59/57
	Sound pressure level (H/M/L)	dB(A)	44/41/36	48/46/44	48/46/44
Installation	External dimensions (W/D/H)	mm	990/655/199	990/655/199	990/655/199
	Shipping dimensions (W/D/H)	mm	1150/750/300	1150/750/300	1150/750/300
	Net/Shipping weight	kg	26.3/32.3	28.3/34.3	28.3/34.3
	Refrigerant liquid pipe	mm	6.35	6.35	9.52
	Refrigerant gas pipe	mm	9.52	12.7	15.88
	Controller	Standard	YR-HD	YR-HD	YR-HD
		Option	Please refer to control system in page 131		

SLIM LOW ESP DUCT

EUROVENT CERTIFIED PERFORMANCE

AD09SS1ERA(N) **AD12SS1ERA(N)**

9,12K

YR-E17

- DC fan motor
- Super slim design, only 185mm
- Reserved fresh air inlet
- Built-in high head drain pump
- Friendly design of rear or bottom air return

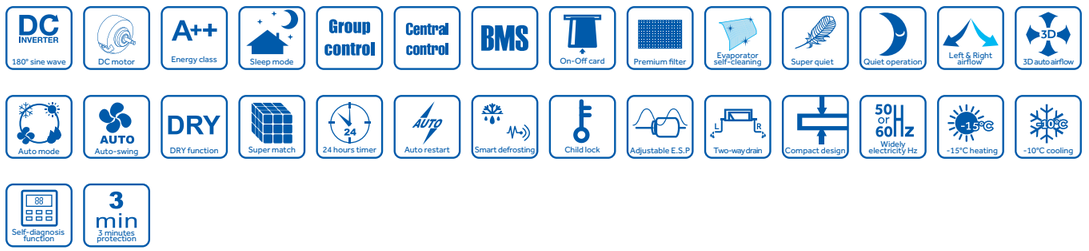

Model/ Standard Indoor unit (drain pump excluded)			AD09SS1ERA(N)	AD12SS1ERA(N)
Model/ Optional Indoor unit (drain pump included)			AD09SS1ERA(N)(P)	AD12SS1ERA(N)(P)
Capacity	Nominal Cooling	Btu/h	9200	12000
		kW (min~max)	2.7	3.50(0.9~4.5)
	Nominal Heating	Btu/h	9550	13650
		kW (min~max)	2.8	4.00(1~4.8)
	Cooling P design(35°C)	kW	/	3.5
	Heating P design (-10°C)	kW	/	3
Electrical parameters	Power supply	Ph/V/Hz	1/220~230/50/60	1/220~230/50/60
Performance	Air flow (H/M/L)	m3/h	530/460/390	600/480/420
	External static pressure	Pa	0/10/20/30	0/10/20/30
	Sound power level (H/M/L)	dB(A)	50	52
	Sound pressure level (H/M/L)	dB(A)	33/29/21	35/30/22
Installation	External dimensions (W/D/H)	mm	850/420/185	850/420/185
	Shipping dimensions (W/D/H)	mm	1045/540/270	1045/540/270
	Net/Shipping weight	kg	16/21	16/21
	Refrigerant liquid pipe	mm	6.35	6.35
	Refrigerant gas pipe	mm	9.52	9.52
	Controller	Standard	YR-E17	YR-E17
		Option	Please refer to control system in page 131	
Panel	Panel Model		P1B-890IA/D	P1B-890IA/D
	External dimensions(W/D/H)	mm	890/190/100(outlet panel)	890/190/100(outlet panel)
		mm	890/290.5/32.4(inlet panel)	890/290.5/32.4(inlet panel)
	Shipping dimensions(W/D/H)	mm	938/335/220	938/335/220
	Net/Shipping weight	kg	4/5	4/5

SLIM LOW ESP DUCT

EUROVENT CERTIFIED PERFORMANCE

AD18SS1ERA(N) AD24SS1ERA(N)

YR-E17

18,24K

- DC fan motor
- New design 3D air flow air grille
- Super slim design, only 185mm
- Reserved fresh air inlet
- Built-in high head drain pump

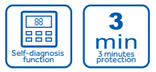

Model/ Standard Indoor unit (drain pump excluded)			AD18SS1ERA(N)	AD24SS1ERA(N)
Model/ Optional Indoor unit (drain pump included)			AD18SS1ERA(N)(P)	AD24SS1ERA(N)(P)
Capacity	Nominal Cooling	Btu/h	17000	24200
		kW (min~max)	5(1.8~6)	7.1(2~7.6)
	Nominal Heating	Btu/h	18800	24200
		kW (min~max)	5.5(2~6.2)	7.1(3~8.3)
	Cooling P design(35°C)	kW	5	7.1
	Heating P design (-10°C)	kW	5.5	5.6
Electrical parameters	Power supply	Ph/V/Hz	1/220~230/50/60	1/220~230/50/60
Performance	Air flow (H/M/L)	m3/h	900/750/600	1000/850/750
	External static pressure	Pa	0/10/20/30	0/10/20/30
	Sound power level (H/M/L)	dB(A)	54	57
	Sound pressure level (H/M/L)	dB(A)	36/30/26	39/32/29
Installation	External dimensions (W/D/H)	mm	1170/420/185	1170/420/185
	Shipping dimensions (W/D/H)	mm	1365/540/270	1365/540/270
	Net/Shipping weight	kg	22/28	24/30
	Refrigerant liquid pipe	mm	6.35	9.52
	Refrigerant gas pipe	mm	12.7	15.88
	Controller	Standard	YR-E17	YR-E17
		Option	Please refer to control system in page 131	
Panel	Panel Model		P1B-1210IA/D	P1B-1210IA/D
	External dimensions(W/D/H)	mm	1210/190/100(outlet panel)	1210/190/100(outlet panel)
		mm	1210/290.5/32.4 (inlet panel)	1210/290.5/32.4 (inlet panel)
	Shipping dimensions(W/D/H)	mm	1258/335/220	1258/335/220
	Net/Shipping weight	kg	5/6	5/6

LOW ESP DUCT

EUROVENT CERTIFIED PERFORMANCE

AD09LS1ERA AD12LS1ERA AD18LS1ERA AD24LS1ERA

YR-E17

9,12K **18,24K**

- Ultra thin design, only 220mm
- Knock-down drain pan
- Two-way pipe connection
- Left or right side drain outlet
- Reserved fresh air inlet

Model/indoor unit			AD09LS1ERA	AD12LS1ERA	AD18LS1ERA	AD24LS1ERA
Capacity	Nominal Cooling	Btu/h	8550	12000	17000	23200
		kW (min~max)	2.5	3.50(0.9~4.5)	5(1.8~6)	6.8(2~7.6)
	Nominal Heating	Btu/h	9900	13650	18800	24200
		kW (min~max)	2.9	4.00(1~4.8)	5.5(2~6.2)	7.1(3~8.3)
	Cooling P design (35°C)	kW	/	3.5	5	6.8
	Heating P design (-10°C)	kW	/	2.8	4.7	5.2
Electrical parameters	Power supply	Ph/V/Hz	1/220~230/50/60	1/220~230/50/60	1/220~230/50/60	1/220~230/50/60
Performance	Air flow (H/M/L)	m^3/h	550/450/400	550/450/400	850/780/600	1200/1050/850
	External static pressure	Pa	0/25	0/25	0/25	0/25
	Sound power level (H/M/L)	dB(A)	47	47/44/41	54/48/45	59/55/51
	Sound pressure level (H/M/L)	dB(A)	37/34/31	37/34/31	41/35/32	46/42/38
Installation	External dimensions (W/D/H)	mm	610/484/220	610/484/220	1090/484/220	1090/484/220
	Shipping dimensions (W/D/H)	mm	695/536/265	695/536/265	1174/545/280	1174/545/280
	Net/Shipping weight	kg	14/19	14/16	23/26.5	25.2/28.4
	Refrigerant liquid pipe	mm	6.35	6.35	6.35	9.52
	Refrigerant gas pipe	mm	9.52	9.52	12.7	15.88
	Controller	Standard	YR-E17	YR-E17	YR-E17	YR-E17
		Option	Please refer to control system in page 131			

MEDIUM ESP DUCT

EUROVENT CERTIFIED PERFORMANCE

AD12MS1ERA **AD18MS1ERA** **AD24MS2ERA**

12K

YR-E17

18K,24K

- DC fan motor
- Ultra thin design, only 250mm
- Adjust ESP: 10/30/50/70Pa by wired controller
- Built-in high head drain pump
- Reserved fresh air inlet
- Friendly design of rear or bottom air return

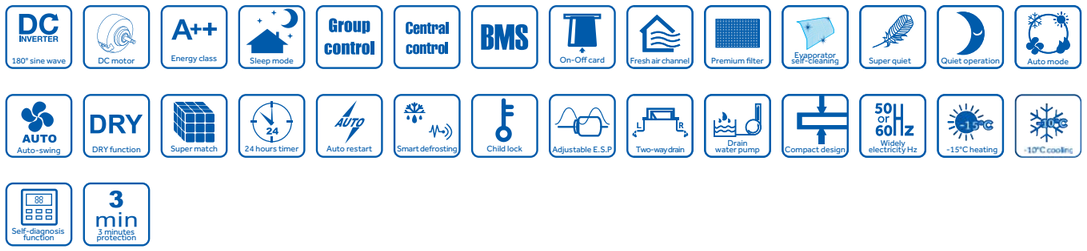

Model/Standard Indoor unit (drain pump included) Model/Optional Indoor unit (drain pump excluded)			AD12MS1ERA AD12MS1ERA(D)	AD18MS1ERA AD18MS1ERA(D)	AD24MS2ERA AD24MS2ERA(D)
Capacity	Nominal Cooling	Btu/h	12000	17000	24200
		kW (min~max)	3.50(0.9~4.5)	5(1.8~6)	7.1(2.0~8.2)
	Nominal Heating	Btu/h	13650	18800	25600
		kW (min~max)	4.00(1~4.8)	5.5(2~6.2)	7.5(2.5~8.5)
	Cooling P design (35°C)	kW	3.5	5	7.1
	Heating P design (-10°C)	kW	2.7	4.5	5.2
Electrical parameters	Power supply	Ph/V/Hz	1/220~230/50/60	1/220~230/50/60	1/220~230/50/60
Performance	Air flow (H/M/L)	m^3/h	550/460/400	920/750/580	1050/1000/900
	External static pressure	Pa	10/30(default)/50/70	10/30(default)/50/70	10/30(default)/50/70
	Sound power level (H/M/L)	dB(A)	56	57	58
	Sound pressure level (H/M/L)	dB(A)	36/33/29	36/33/29	42/38/35
Installation	External dimensions (W/D/H)	mm	672/655/250	957/655/250	957/655/250
	Shipping dimensions (W/D/H)	mm	920/820/340	1170/860/340	1170/860/340
	Net/Shipping weight	kg	22/24	28/30	30/32
	Refrigerant liquid pipe	mm	6.35	6.35	9.52
	Refrigerant gas pipe	mm	9.52	12.7	15.88
	Controller	Standard	YR-E17	YR-E17	YR-E17
		Option	Please refer to control system in page 131		

MATCH TABLE

2U14CS2ERA(S) for AQUA&Console

COOLING

Comb.	Combinations			Rated capacity output(kW)			Total cooling input(kW)			Total power input(kW)			Total current(A)@230V			EER	ENERGY CLASS	EER(W/W)	ENERGY CLASS
	UnitA	UnitB	UnitC	UnitA	UnitB	UnitC	Min.data	Rated data	Max.data	Min.data	Rated data	Max.data	Min.data	Rated data	Max.data			Rated capacity	
1 : 2	7	----	----	2.00	----	----	1.05	2.00	2.90	0.24	0.50	0.85	1.2	2.4	4.0	3.98	A	5.60	A+
	9	----	----	2.50	----	----	1.05	2.50	3.00	0.24	0.65	0.95	1.2	3.0	4.4	3.84	A	5.60	A+
	12	----	----	3.50	----	----	1.05	3.50	3.80	0.24	0.91	1.14	1.2	4.3	5.3	3.84	A	5.60	A+
	7	7	----	1.95	1.95	----	1.20	3.90	4.30	0.28	1.02	1.29	1.3	4.7	5.9	3.82	A	5.10	A
	7	9	----	1.70	2.20	----	1.20	3.90	4.30	0.29	1.02	1.32	1.4	4.7	6.0	3.82	A	5.10	A
	7	12	----	1.45	2.55	----	1.20	4.00	4.40	0.29	1.04	1.36	1.4	4.8	6.2	3.83	A	5.10	A
	9	9	----	2.00	2.00	----	1.20	4.00	4.40	0.29	1.10	1.36	1.4	5.0	6.2	3.63	A	5.10	A
	9	12	----	1.80	2.30	----	1.20	4.10	4.50	0.29	1.07	1.40	1.4	4.8	6.3	3.83	A	5.10	A

HEATING

Comb.	Combinations			Rated capacity output(kW)			Total heating input(kW)			Total power input(kW)			Total current(A)@230V			COP	ENERGY CLASS	SCOP(W/W)	ENERGY CLASS
	UnitA	UnitB	UnitC	UnitA	UnitB	UnitC	Min.data	Rated data	Max.data	Min.data	Rated data	Max.data	Min.data	Rated data	Max.data			Rated capacity	
1 : 2	7	----	----	2.30	----	----	1.20	2.30	3.00	0.28	0.67	1.09	1.4	3.2	5.1	3.41	B	3.30	B
	9	----	----	2.90	----	----	1.20	2.90	3.50	0.28	0.85	1.27	1.4	4.0	5.9	3.42	B	3.30	B
	12	----	----	3.80	----	----	1.20	3.80	4.20	0.28	1.10	1.52	1.4	5.1	7.1	3.45	B	3.30	B
	7	7	----	2.10	2.10	----	1.50	4.20	4.60	0.34	1.09	1.56	1.6	5.0	7.1	3.87	A	3.80	A
	7	9	----	1.80	2.40	----	1.50	4.20	4.70	0.34	1.09	1.60	1.6	5.0	7.3	3.86	A	3.80	A
	7	12	----	1.60	2.80	----	1.50	4.40	4.80	0.34	1.12	1.60	1.6	5.1	7.3	3.94	A	3.80	A
	9	9	----	2.20	2.20	----	1.50	4.40	4.80	0.34	1.14	1.60	1.6	5.2	7.3	3.85	A	3.80	A
	9	12	----	2.00	2.40	----	1.50	4.40	5.00	0.34	1.13	1.65	1.6	5.1	7.4	3.90	A	3.80	A

2U14CS2ERA(S)

FOR Nebula/Zircon

COOLING

Comb.	Combinations			Rated capacity output(kW)			Total cooling input(kW)			Total power input(kW)			Total current(A)@230V			EER	ENERGY CLASS	SEER(W/W)	ENERGY CLASS
	UnitA	UnitB	UnitC	UnitA	UnitB	UnitC	Min.data	Rated data	Max.data	Min.data	Rated data	Max.data	Min.data	Rated data	Max.data			Rated capacity	
1 : 2	7	----	----	2.00	----	----	1.05	2.00	2.90	0.24	0.48	0.85	1.2	2.2	4.0	4.17	A	6.80	A++
	9	----	----	2.50	----	----	1.05	2.50	3.00	0.24	0.60	0.95	1.2	2.8	4.4	4.17	A	6.80	A++
	12	----	----	3.50	----	----	1.05	3.50	3.80	0.24	0.88	1.14	1.2	4.1	5.3	3.98	A	6.80	A++
	7	7	----	1.95	1.95	----	1.20	3.90	4.30	0.28	1.02	1.29	1.3	4.6	5.9	3.84	A	6.10	A++
	7	9	----	1.70	2.20	----	1.20	3.90	4.30	0.29	1.02	1.32	1.4	4.6	6.0	3.84	A	6.10	A++
	7	12	----	1.45	2.55	----	1.20	4.00	4.40	0.29	1.05	1.36	1.4	4.8	6.2	3.82	A	6.10	A++
	9	9	----	2.00	2.00	----	1.20	4.00	4.40	0.29	1.05	1.36	1.4	4.8	6.2	3.82	A	6.10	A++
	9	12	----	1.80	2.30	----	1.20	4.10	4.50	0.29	1.07	1.40	1.4	4.8	6.3	3.83	A	6.10	A++

HEATING

Comb.	Combinations			Rated capacity output(kW)			Total heatng input(kW)			Total power input(kW)			Total current(A)@230V			COP	ENERGY CLASS	SCOP(W/W)	ENERGY CLASS
	UnitA	UnitB	UnitC	UnitA	UnitB	UnitC	Min.data	Rated data	Max.data	Min.data	Rated data	Max.data	Min.data	Rated data	Max.data			Rated capacity	
1 : 2	7	----	----	2.30	----	----	1.20	2.30	3.00	0.28	0.67	1.09	1.4	3.2	5.1	3.41	B	3.80	A
	9	----	----	2.90	----	----	1.20	2.90	3.50	0.28	0.85	1.27	1.4	4.0	5.9	3.42	B	3.80	A
	12	----	----	3.80	----	----	1.20	3.80	4.20	0.28	1.10	1.52	1.4	5.2	7.1	3.44	B	3.80	A
	7	7	----	2.10	2.10	----	1.50	4.20	4.60	0.34	1.09	1.56	1.6	5.0	7.1	3.87	A	4.00	A+
	7	9	----	1.80	2.40	----	1.50	4.20	4.70	0.34	1.08	1.60	1.6	5.0	7.3	3.88	A	4.00	A+
	7	12	----	1.60	2.80	----	1.50	4.40	4.80	0.34	1.12	1.60	1.6	5.1	7.3	3.92	A	4.00	A+
	9	9	----	2.20	2.20	----	1.50	4.40	4.80	0.34	1.11	1.60	1.6	5.1	7.3	3.95	A	4.00	A+
	9	12	----	2.00	2.40	----	1.50	4.40	5.00	0.34	1.09	1.65	1.6	4.9	7.4	4.03	A	4.00	A+

Note: Model 2U14CS2ERA(S) can match with wall mounted type, console type and duct type only.

2U18FS2ERA(S) for AQUA&Console

COOLING

Comb.	Combinations			Rated capacity output(kW)			Total cooling input(kW)			Total power input(kW)			Total current(A)@230V			EER	ENERGY CLASS	EER(W/W)	ENERGY CLASS
	UnitA	UnitB	UnitC	UnitA	UnitB	UnitC	Min.data	Rated data	Max.data	Min.data	Rated data	Max.data	Min.data	Rated data	Max.data			Rated capacity	
1 : 2	7	----	----	2.00	_	----	1.10	2.00	2.90	0.26	0.58	1.00	1.3	2.9	4.7	3.42	A	5.60	A +
	9	----	----	2.50	_	----	1.10	2.50	3.50	0.26	0.73	1.20	1.3	3.7	5.6	3.41	A	5.60	A +
	12	----	----	3.50	_	----	1.10	3.50	4.00	0.26	1.04	1.40	1.3	5.0	6.5	3.35	A	5.60	A +
	7	7	----	2.50	2.50	----	1.30	5.00	5.40	0.33	1.52	1.91	1.6	7.2	8.7	3.30	A	5.10	A
	7	9	----	2.20	2.80	----	1.30	5.00	5.40	0.33	1.52	1.91	1.6	7.3	8.7	3.28	A	5.10	A
	7	12	----	1.85	3.25	----	1.30	5.10	5.60	0.35	1.55	2.00	1.7	7.4	9.2	3.29	A	5.10	A
	9	9	----	2.55	2.55	----	1.30	5.10	5.60	0.35	1.57	2.00	1.6	7.4	9.2	3.24	A	5.10	A
	9	12	----	2.10	3.00	----	1.30	5.10	5.70	0.35	1.58	2.03	1.6	7.5	9.1	3.23	A	5.10	A
	12	12	----	2.55	2.55	----	1.30	5.10	5.80	0.35	1.55	2.07	1.6	7.5	9.3	3.28	A	5.10	A

HEATING

Comb.	Combinations			Rated capacity output(kW)			Total heating input(kW)			Total power input(kW)			Total current(A)@230V			COP	ENERGY CLASS	SCOP(W/W)	ENERGY CLASS
	UnitA	UnitB	UnitC	UnitA	UnitB	UnitC	Min.data	Rated data	Max.data	Min.data	Rated data	Max.data	Min.data	Rated data	Max.data			Rated capacity	
1 : 2	7	----	----	2.30	_	----	1.30	2.30	3.20	0.36	0.67	1.25	1.7	3.4	5.8	3.43	B	3.30	B
	9	----	----	2.90	_	----	1.30	2.90	3.70	0.36	0.84	1.43	1.7	4.0	6.7	3.45	B	3.30	B
	12	----	----	3.80	_	----	1.30	3.80	4.50	0.36	1.11	1.73	1.7	5.3	8.1	3.42	B	3.30	B
	7	7	----	2.80	2.80	----	1.60	5.60	6.20	0.41	1.54	2.25	1.9	7.4	10.3	3.62	A	3.80	A
	7	9	----	2.50	3.10	----	1.60	5.60	6.20	0.41	1.53	2.25	1.9	7.3	10.3	3.64	A	3.80	A
	7	12	----	2.10	3.70	----	1.70	5.80	6.40	0.42	1.58	2.25	2.0	7.9	10.3	3.67	A	3.80	A
	9	9	----	2.90	2.90	----	1.70	5.80	6.40	0.42	1.58	2.25	2.0	7.9	10.3	3.66	A	3.80	A
	9	12	----	2.40	3.40	----	1.80	5.80	6.50	0.43	1.58	2.28	2.0	7.9	10.2	3.65	A	3.80	A
	12	12	----	2.90	2.90	----	1.90	5.80	6.60	0.45	1.57	2.30	2.1	7.8	10.3	3.69	A	3.80	A

2U18FS2ERA(S)

FOR Nebula/Zircon

COOLING

Comb.	Combinations			Rated capacity output(kW)			Total cooling input(kW)			Total power input(kW)			Total current(A)@230V			EER(W/W)	ENERGY CLASS	EER(W/W)	ENERGY CLASS
	UnitA	UnitB	UnitC	UnitA	UnitB	UnitC	Min.data	Rated data	Max.data	Min.data	Rated data	Max.data	Min.data	Rated data	Max.data	Rated capacity		Rated capacity	
1 : 2	7	----	----	2.00	_	----	1.10	2.00	2.90	0.26	0.57	1.00	1.3	2.8	4.7	3.51	A	6.80	A++
	9	----	----	2.50	_	----	1.10	2.50	3.50	0.26	0.70	1.20	1.3	3.5	5.6	3.50	A	6.80	A++
	12	----	----	3.50	_	----	1.10	3.50	4.00	0.26	1.01	1.40	1.3	4.8	6.5	3.47	A	6.80	A++
	7	7	----	2.50	2.50	----	1.30	5.00	5.40	0.33	1.50	1.91	1.6	7.2	8.7	3.33	A	6.10	A++
	7	9	----	2.20	2.80	----	1.30	5.00	5.40	0.33	1.50	1.91	1.6	7.2	8.7	3.33	A	6.10	A++
	7	12	----	1.85	3.25	----	1.30	5.10	5.60	0.35	1.54	2.00	1.7	7.4	9.2	3.31	A	6.10	A++
	9	9	----	2.55	2.55	----	1.30	5.10	5.60	0.35	1.54	2.00	1.6	7.3	9.2	3.31	A	6.10	A++
	9	12	----	2.10	3.00	----	1.30	5.10	5.70	0.35	1.53	2.03	1.6	7.3	9.1	3.34	A	6.10	A++
	12	12	----	2.55	2.55	----	1.30	5.10	5.80	0.35	1.54	2.07	1.6	7.3	9.3	3.31	A	6.10	A++

HEATING

Comb.	Combinations			Rated capacity output(kW)			Total heating input(kW)			Total power input(kW)			Total current(A)@230V			COP(W/W)	ENERGY CLASS	SCOP(W/W)	ENERGY CLASS
	UnitA	UnitB	UnitC	UnitA	UnitB	UnitC	Min.data	Rated data	Max.data	Min.data	Rated data	Max.data	Min.data	Rated data	Max.data	Rated capacity		Rated capacity	
1 : 2	7	----	----	2.30	_	----	1.30	2.30	3.20	0.36	0.67	1.25	1.7	3.5	5.8	3.41	B	3.80	A
	9	----	----	2.90	_	----	1.30	2.90	3.70	0.36	0.85	1.43	1.7	4.1	6.7	3.42	B	3.80	A
	12	----	----	3.80	_	----	1.30	3.80	4.50	0.36	1.10	1.73	1.7	5.2	8.1	3.44	B	3.80	A
	7	7	----	2.80	2.80	----	1.60	5.60	6.20	0.41	1.53	2.25	1.9	7.3	10.3	3.65	A	4.00	A+
	7	9	----	2.50	3.10	----	1.60	5.60	6.20	0.41	1.53	2.25	1.9	7.4	10.3	3.67	A	4.00	A+
	7	12	----	2.10	3.70	----	1.70	5.80	6.40	0.42	1.57	2.25	2.0	7.8	10.3	3.70	A	4.00	A+
	9	9	----	2.90	2.90	----	1.70	5.80	6.40	0.42	1.56	2.25	2.0	7.7	10.3	3.71	A	4.00	A+
	9	12	----	2.40	3.40	----	1.80	5.80	6.50	0.43	1.56	2.28	2.0	7.6	10.2	3.72	A	4.00	A+
	12	12	----	2.90	2.90	----	1.90	5.80	6.60	0.45	1.55	2.30	2.1	7.6	10.3	3.74	A	4.00	A+

Note: Model 2U18FS2ERA(S) can match with wall mounted type, console type and duct type only.

MATCH TABLE

3U19FS1ERA(N)

COOLING

Comb.	Combinations			Rated capacity(Kw) (Nom. cooling)			Total cooling capacity(kW)			Total power input(kW)			Total current(A)@230V			EER(W/W)	ENERGY LABEL	SEER (W/W)	ENERGY LABEL
	UnitA	UnitB	UnitC	UnitA	UnitB	UnitC	Min.data	Rated data	Max.data	Min.data	Rated data	Max.data	Min.data	Rated data	Max.data	Rated capacity			
1x1	7	—	—	2.0	—	—	1.00	2.00	2.80	0.50	0.55	1.30	2.22	2.44	5.77	3.64	A	6.20	A++
	9	—	—	2.5	—	—	1.00	2.50	3.10	0.50	0.70	1.34	2.22	3.11	5.93	3.57	A	6.20	A++
	12	—	—	3.5	—	—	1.00	3.50	4.10	0.50	1.00	1.50	2.22	4.44	6.65	3.50	A	6.20	A++
	15	—	—	4.4	—	—	1.30	4.40	5.00	0.50	1.30	1.90	2.22	5.77	8.43	3.38	A	6.20	A++
	18	—	—	5.0	—	—	1.50	5.00	5.40	0.50	1.50	1.90	2.22	6.65	8.43	3.33	A	6.20	A++
	24	—	—	5.4	—	—	1.50	5.40	7.00	0.50	1.60	2.00	2.22	7.10	8.87	3.38	A	6.20	A++
1x2	7	7	—	2.00	2.00	—	1.00	4.00	5.60	0.50	1.20	2.55	2.22	5.32	11.30	3.33	A	6.40	A++
	7	9	—	2.00	2.50	—	1.00	4.50	5.90	0.50	1.40	2.55	2.22	6.21	11.30	3.21	A	6.40	A++
	7	12	—	1.96	3.44	—	1.00	5.40	6.90	0.50	1.66	2.55	2.22	7.36	11.30	3.25	A	6.40	A++
	7	15		1.69	3.71		1.30	5.40	7.00	0.50	1.66	2.55	2.22	7.36	11.30	3.25	A	6.40	A++
	7	18	—	1.54	3.86	—	1.50	5.40	7.00	0.50	1.66	2.55	2.22	7.36	11.30	3.25	A	6.40	A++
	9	9	—	2.50	2.50	—	1.00	5.00	7.00	0.50	1.32	2.55	2.22	5.83	11.30	3.80	A	6.20	A++
	9	12	—	2.25	3.15	—	1.50	5.40	7.00	0.50	1.61	2.55	2.22	7.14	11.30	3.35	A	6.40	A++
	9	15	—	1.96	3.44	—	1.50	5.40	7.00	0.50	1.61	2.55	2.22	7.14	11.30	3.35	A	6.40	A++
	9	18	—	1.80	3.60	—	1.50	5.40	7.00	0.50	1.61	2.55	2.22	7.14	11.30	3.35	A	6.40	A++
	12	12	—	2.70	2.70	—	1.50	5.40	7.00	0.50	1.61	2.55	2.22	7.14	11.30	3.35	A	6.40	A++
	12	15	—	2.39	3.01	—	1.50	5.40	7.00	0.50	1.61	2.55	2.22	7.14	11.30	3.35	A	6.40	A++
	12	18	—	2.22	3.18	—	1.50	5.40	7.00	0.50	1.61	2.55	2.22	7.14	11.30	3.35	A	6.40	A++
1x3	7	7	7	1.80	1.80	1.80	1.50	5.40	7.00	0.50	1.50	2.55	2.22	6.65	11.30	3.60	A	7.00	A++
	7	7	9	1.66	1.66	2.08	1.50	5.40	7.00	0.50	1.50	2.55	2.22	6.65	11.30	3.60	A	7.00	A++
	7	7	12	1.44	1.44	2.52	1.50	5.40	7.00	0.50	1.50	2.55	2.22	6.65	11.30	3.60	A	7.00	A++
	7	7	15	1.29	1.29	2.83	1.50	5.40	7.00	0.50	1.50	2.55	2.22	6.65	11.30	3.60	A	7.00	A++
	7	7	18	1.20	1.20	3.00	1.50	5.40	7.00	0.50	1.50	2.55	2.22	6.65	11.30	3.60	A	7.00	A++
	7	9	9	1.54	1.93	1.93	1.50	5.40	7.00	0.50	1.40	2.55	2.22	6.21	11.30	3.85	A	7.00	A++
	7	9	12	1.35	1.69	2.36	1.50	5.40	7.00	0.50	1.40	2.55	2.22	6.21	11.30	3.86	A	7.00	A++
	7	12	12	1.20	2.10	2.10	1.50	5.40	7.00	0.50	1.40	2.55	2.22	6.21	11.30	3.86	A	7.00	A++
	9	9	9	1.80	1.80	1.80	1.50	5.40	7.00	0.50	1.32	2.55	2.22	5.84	11.30	4.10	A	7.00	A++
	9	9	12	1.59	1.59	2.22	1.50	5.40	7.00	0.50	1.31	2.55	2.22	5.81	11.30	4.12	A	7.20	A++
	9	12	12	1.42	1.99	1.99	1.50	5.40	7.00	0.50	1.30	2.55	2.22	5.77	11.30	4.15	A	7.20	A++

3U19FS1ERA(N)

HEATING

Comb.	Combinations			Rated capacity(Kw) (Nom. cooling)			Total cooling capacity(kW)			Total power input(kW)			Total current(A)@230V			EER(W/W)	ENERGY LABEL	SEER (W/W)	ENERGY LABEL
	UnitA	UnitB	UnitC	UnitA	UnitB	UnitC	Min.data	Rated data	Max.data	Min.data	Rated data	Max.data	Min.data	Rated data	Max.data	Rated capacity			
1x1	7	—	—	2.3	—	—	1.00	2.30	4.00	0.47	0.60	1.50	2.09	2.66	6.65	3.83	A	3.60	A
	9	—	—	2.9	—	—	1.00	2.90	4.10	0.47	0.80	1.40	2.09	3.55	6.21	3.63	A	3.60	A
	12	—	—	3.8	—	—	1.00	3.80	4.10	0.47	1.05	1.50	2.09	4.66	6.65	3.62	A	3.60	A
	15	—	—	5.4	—	—	1.50	5.40	6.00	0.47	1.45	1.90	2.09	6.43	8.43	3.72	A	3.60	A
	18	—	—	5.5	—	—	1.50	5.50	6.00	0.47	1.49	2.55	2.09	6.61	11.30	3.69	A	3.60	A
	24	—	—	6.5	—	—	1.50	6.50	8.10	0.47	1.80	2.55	2.09	7.99	11.30	3.61	A	3.60	A
1x2	7	7	—	2.30	2.30	—	1.20	4.60	8.00	0.47	1.25	2.30	2.09	5.55	10.20	3.68	A	3.70	A
	7	9	—	2.30	2.90	—	1.20	5.20	8.10	0.47	1.44	2.30	2.09	6.39	10.20	3.61	A	3.70	A
	7	12	—	2.30	3.80	—	1.20	6.10	8.10	0.47	1.67	2.30	2.09	7.41	10.20	3.65	A	3.80	A
	7	15	—	1.94	4.56		1.80	6.50	8.10	0.50	1.80	2.55	2.22	7.99	11.30	3.61	A	3.80	A
	7	18	—	1.92	4.58	—	1.80	6.50	8.10	0.50	1.80	2.55	2.22	7.99	11.30	3.61	A	3.80	A
	9	9	—	3.00	3.00	—	1.80	6.00	8.10	0.50	1.46	2.55	2.22	6.49	11.30	4.10	A	3.80	A
	9	12	—	2.81	3.69	—	1.80	6.50	8.10	0.50	1.76	2.55	2.22	7.81	11.30	3.69	A	3.80	A
	9	15	—	2.27	4.23	—	1.80	6.50	8.10	0.50	1.77	2.55	2.22	7.85	11.30	3.67	A	3.80	A
	9	18	—	2.24	4.26	—	1.80	6.50	8.10	0.50	1.77	2.55	2.22	7.85	11.30	3.67	A	3.80	A
	12	12	—	3.25	3.25	—	1.80	6.50	8.10	0.50	1.77	2.55	2.22	7.85	11.30	3.67	A	3.80	A
	12	15	—	2.68	3.82	—	1.80	6.50	8.10	0.50	1.77	2.55	2.22	7.85	11.30	3.67	A	3.80	A
	12	18	—	2.66	3.84	—	1.80	6.50	8.10	0.50	1.77	2.55	2.22	7.85	11.30	3.67	A	3.80	A
1x3	7	7	7	2.17	2.17	2.17	1.80	6.50	8.10	0.50	1.55	2.55	2.22	6.88	11.30	4.19	A	3.95	A
	7	7	9	1.99	1.99	2.51	1.80	6.50	8.10	0.50	1.60	2.55	2.22	7.10	11.30	4.06	A	3.95	A
	7	7	12	1.78	1.78	2.94	1.80	6.50	8.10	0.50	1.60	2.55	2.22	7.10	11.30	4.06	A	3.95	A
	7	7	15	1.50	1.50	3.51	1.80	6.50	8.10	0.50	1.65	2.55	2.22	7.32	11.30	3.94	A	3.95	A
	7	7	18	1.48	1.48	3.54	1.80	6.50	8.10	0.50	1.65	2.55	2.22	7.32	11.30	3.94	A	3.95	A
	7	9	9	1.85	2.33	2.33	1.80	6.50	8.10	0.50	1.60	2.55	2.22	7.10	11.30	4.06	A	4.00	A+
	7	9	12	1.66	2.09	2.74	1.80	6.50	8.10	0.50	1.55	2.55	2.22	6.88	11.30	4.19	A	4.00	A+
	7	12	12	1.51	2.49	2.49	1.80	6.50	8.10	0.50	1.55	2.55	2.22	6.88	11.30	4.19	A	4.00	A+
	9	9	9	2.17	2.17	2.17	1.80	6.50	8.10	0.50	1.46	2.55	2.22	6.46	11.30	4.46	A	4.00	A+
	9	9	12	1.96	1.96	2.57	1.80	6.50	8.10	0.50	1.45	2.55	2.22	6.43	11.30	4.48	A	4.00	A+
	9	12	12	1.80	2.35	2.35	1.80	6.50	8.10	0.50	1.45	2.55	2.22	6.43	11.30	4.48	A	4.00	A+

MATCH TABLE

3U24GS1ERA(N)

COOLING

Comb.	Combinations			Rated capacity(kW) (Nom.cooling)			Total cooling capacity(kW)			Total power input(kW)			Total current(A)@230V			EER(W/W)	ENERGY LABEL	SEER (W/W)	ENERGY LABEL
	UnitA	UnitB	UnitC	UnitA	UnitB	UnitC	Min.data	Rated data	Max.data	Min.data	Rated data	Max.data	Min.data	Rated data	Max.data	Rated capacity			
1x1	7	—	—	2.0	—	—	1.00	2.00	2.80	0.50	0.55	1.30	2.22	2.44	5.8	3.64	A	6.20	A++
	9	—	—	2.5	—	—	1.00	2.50	3.10	0.50	0.70	1.34	2.22	3.11	5.9	3.57	A	6.20	A++
	12	—	—	3.5	—	—	1.00	3.50	4.10	0.50	1.00	1.65	2.22	4.44	7.3	3.50	A	6.20	A++
	15	—	—	4.4	—	—	1.30	4.40	5.20	0.50	1.23	1.90	2.22	5.46	8.43	3.58	A	6.20	A++
	18	—	—	5.0	—	—	1.50	5.00	5.40	0.50	1.45	2.00	2.22	6.43	8.9	3.45	A	6.20	A++
	24	—	—	6.5	—	—	1.50	6.50	7.40	0.50	1.90	2.60	2.22	8.43	11.5	3.42	A	6.20	A++
1x2	7	7	—	2.00	2.00	—	1.00	4.00	5.60	0.50	1.20	2.60	2.22	5.32	11.5	3.33	A	6.40	A++
	7	9	—	2.00	2.50	—	1.00	4.50	5.90	0.50	1.40	2.64	2.22	6.21	11.7	3.21	A	6.40	A++
	7	12	—	2.00	3.50	—	1.00	5.50	6.90	0.50	1.70	2.95	2.22	7.54	13.1	3.24	A	6.40	A++
	7	15	—	2.00	4.40	—	1.00	6.40	8.20	0.50	1.95	3.00	2.22	8.65	13.3	3.28	A	6.40	A++
	7	18	—	1.91	4.79	—	1.50	6.70	8.20	0.50	2.07	3.00	2.22	9.18	13.3	3.24	A	6.40	A++
	9	9	—	2.50	2.50	—	1.00	5.00	6.20	0.50	1.55	2.68	2.22	6.88	11.9	3.23	A	6.40	A++
	9	12	—	2.50	3.50	—	1.00	6.00	7.20	0.50	1.80	2.99	2.22	7.99	13.3	3.33	A	6.40	A++
	9	15	—	2.43	4.27	—	1.50	6.70	8.20	0.50	2.00	3.00	2.22	8.87	13.3	3.35	A	6.40	A++
	9	18	—	2.23	4.47	—	1.50	6.70	8.20	0.50	2.00	3.00	2.22	8.87	13.3	3.35	A	6.40	A++
	12	12	—	3.35	3.35	—	1.00	6.70	8.20	0.50	1.97	3.00	2.22	8.74	13.3	3.40	A	6.20	A++
	12	15	—	2.97	3.73	—	1.50	6.70	8.20	0.50	2.00	3.00	2.22	8.87	13.3	3.35	A	6.40	A++
	12	18	—	2.76	3.94	—	1.50	6.70	8.20	0.50	2.00	3.00	2.22	8.87	13.3	3.35	A	6.40	A++
1x3	7	7	7	2.00	2.00	2.00	1.00	6.00	8.20	0.50	1.70	3.00	2.22	7.54	13.3	3.53	A	6.90	A++
	7	7	9	2.00	2.00	2.50	1.00	6.50	8.20	0.50	1.79	3.00	2.22	7.94	13.3	3.63	A	6.90	A++
	7	7	12	1.79	1.79	3.13	1.00	6.70	8.20	0.50	1.79	3.00	2.22	7.94	13.3	3.74	A	6.90	A++
	7	7	15	1.60	1.60	3.51	1.50	6.70	8.20	0.50	1.79	3.00	2.22	7.94	13.3	3.74	A	6.90	A++
	7	7	18	1.49	1.49	3.72	1.50	6.70	8.20	0.50	1.79	3.00	2.22	7.94	13.3	3.74	A	6.90	A++
	7	9	9	1.91	2.39	2.39	1.00	6.70	8.20	0.50	1.76	3.00	2.22	7.81	13.3	3.81	A	6.90	A++
	7	9	12	1.68	2.09	2.93	1.00	6.70	8.20	0.50	1.76	3.00	2.22	7.81	13.3	3.81	A	7.00	A++
	7	12	12	1.49	2.61	2.61	1.00	6.70	8.20	0.50	1.76	3.00	2.22	7.81	13.3	3.81	A	7.00	A++
	9	9	9	2.23	2.23	2.23	1.00	6.70	8.20	0.50	1.68	3.00	2.22	7.43	13.3	4.00	A	7.00	A++
	9	9	12	1.97	1.97	2.76	1.00	6.70	8.20	0.50	1.67	3.00	2.22	7.41	13.3	4.01	A	7.00	A++
	9	12	12	1.76	2.47	2.47	1.00	6.70	8.20	0.50	1.67	3.00	2.22	7.41	13.3	4.01	A	7.00	A++

3U24GS1ERA(N)

HEATING

Comb.	Combinations			Rated capacity(kW) (Nom.cooling)			Total cooling capacity(kW)			Total power input(kW)			Total current(A)@230V			EER(W/W)	ENERGY LABEL	SEER (W/W)	ENERGY LABEL
	UnitA	UnitB	UnitC	UnitA	UnitB	UnitC	Min.data	Rated data	Max.data	Min.data	Rated data	Max.data	Min.data	Rated data	Max.data	Rated capacity			
1x1	7	—	—	2.3	—	—	1.00	2.30	4.00	0.47	0.60	1.40	2.09	2.66	6.21	3.83	A	3.62	A
	9	—	—	2.9	—	—	1.00	2.90	4.10	0.47	0.80	1.50	2.09	3.55	6.65	3.63	A	3.62	A
	12	—	—	3.8	—	—	1.00	3.80	4.10	0.47	1.05	1.65	2.09	4.66	7.32	3.62	A	3.62	A
	15	—	—	5.4	—	—	1.30	5.40	6.00	0.47	1.43	1.90	2.09	6.34	8.43	3.78	A	3.60	A
	18	—	—	5.5	—	—	1.50	5.50	6.00	0.47	1.50	2.00	2.09	6.65	8.87	3.67	A	3.62	A
	24	—	—	7.1	—	—	1.50	7.00	8.60	0.47	1.80	2.60	2.09	7.99	11.54	3.89	A	3.62	A
1x2	7	7	—	2.30	2.30	—	1.20	4.60	8.00	0.47	1.25	3.00	2.50	5.55	13.31	3.68	A	3.71	A
	7	9	—	2.30	2.90	—	1.20	5.20	8.10	0.47	1.43	2.90	2.50	6.34	12.87	3.64	A	3.71	A
	7	12	—	2.30	3.80	—	1.20	6.10	8.10	0.47	1.67	3.00	2.50	7.41	13.31	3.65	A	3.71	A
	7	15	—	2.30	5.40	—	1.80	7.70	9.00	0.50	2.10	3.00	2.65	9.32	13.31	3.67	A	3.77	A
	7	18	—	2.30	5.50	—	1.80	7.80	9.00	0.50	2.14	3.00	2.65	9.49	13.31	3.64	A	3.77	A
	9	9	—	2.90	2.90	—	1.80	5.80	8.20	0.50	1.60	3.00	2.65	7.10	13.31	3.63	A	3.77	A
	9	12	—	2.90	3.80	—	1.80	6.70	8.20	0.50	1.85	3.00	2.50	8.21	13.31	3.62	A	3.77	A
	9	15	—	2.80	5.20	—	1.80	8.00	9.00	0.50	2.20	3.00	2.50	9.76	13.31	3.64	A	3.82	A
	9	18	—	2.76	5.24	—	1.80	8.00	9.00	0.50	2.20	3.00	2.50	9.76	13.31	3.64	A	3.82	A
	12	12	—	3.70	3.70	—	1.80	7.40	8.20	0.50	7.85	3.00	2.65	8.21	13.31	4.00	A	3.80	A
	12	15	—	3.30	4.70	—	1.80	8.00	9.00	0.50	2.20	3.00	2.65	9.76	13.31	3.64	A	3.82	A
	12	18	—	3.27	4.73	—	1.80	8.00	9.00	0.50	2.20	3.00	2.65	9.76	13.31	3.64	A	3.82	A
1x3	7	7	7	2.30	2.30	2.30	1.80	6.90	9.00	0.50	1.85	3.00	2.50	8.21	13.31	3.73	A	3.90	A
	7	7	9	2.30	2.30	2.90	1.80	7.50	9.00	0.50	1.90	3.00	2.65	8.43	13.31	3.95	A	3.90	A
	7	7	12	2.19	2.19	3.62	1.80	8.00	9.00	0.50	1.90	3.00	2.65	8.43	13.31	4.21	A	3.90	A
	7	7	15	1.84	1.84	4.32	1.80	8.00	9.00	0.50	1.95	3.00	2.50	8.65	13.31	4.10	A	3.90	A
	7	7	18	1.82	1.82	4.36	1.80	8.00	9.00	0.50	1.95	3.00	2.50	8.65	13.31	4.10	A	3.90	A
	7	9	9	2.27	2.86	2.86	1.80	8.00	9.00	0.50	1.90	3.00	2.50	8.43	13.31	4.21	A	4.00	A+
	7	9	12	2.04	2.58	3.38	1.80	8.00	9.00	0.50	1.85	3.00	2.50	8.21	13.31	4.32	A	4.00	A+
	7	12	12	1.86	3.07	3.07	1.80	8.00	9.00	0.50	1.88	3.00	2.50	8.34	13.31	4.25	A	4.00	A+
	9	9	9	2.67	2.67	2.67	1.80	8.00	9.00	0.50	1.83	3.00	2.50	8.10	13.31	4.38	A	4.00	A+
	9	9	12	2.42	2.42	3.17	1.80	8.00	9.00	0.50	1.82	3.00	2.50	8.07	13.31	4.39	A	4.00	A+
	9	12	12	2.21	2.90	2.90	1.80	8.00	9.00	0.50	1.82	3.00	2.50	8.07	13.31	4.40	A	4.00	A+

MATCH TABLE

4U26HS1ERA

COOLING

Comb.	Combinations				Rated capacity /kW (Nom. heating)				Total heating capacity(kW)			Total power input(kW)			Total current(A)@230V			COP(W/W)	ENERGY LABEL	SCOP (W/W)	ENERGY LABEL
	UnitA	UnitB	UnitC	UnitD	UnitA	UnitB	UnitC	UnitD	Min.data	Rated data	Max.data	Min.data	Rated data	Max.data	Min.data	Rated data	Max.data	Rated capacity			
1x1	7	—	—	—	2.0	—	—	—	1.00	2.00	2.80	0.50	0.56	1.30	2.22	2.48	5.77	3.57	A	6.20	A++
	9	—	—	—	2.5	—	—	—	1.00	2.50	3.10	0.50	0.70	1.34	2.22	3.11	5.93	3.57	A	6.20	A++
	12	—	—	—	3.5	—	—	—	1.00	3.50	4.10	0.50	1.00	1.50	2.22	4.44	6.65	3.50	A	6.20	A++
	15	—	—	—	4.4	—	—	—	1.30	4.40	5.20	0.50	1.27	1.90	2.22	5.63	8.43	3.46	A	6.20	A++
	18	—	—	—	5.0	—	—	—	1.50	5.00	5.40	0.50	1.50	1.90	2.22	6.65	8.43	3.33	A	6.20	A++
	24	—	—	—	6.5	—	—	—	1.50	6.50	7.40	0.50	2.00	3.00	2.22	8.87	13.31	3.25	A	6.20	A++
1x2	7	15	—	—	2.00	4.40	—	—	1.00	6.40	7.80	0.50	1.95	3.43	2.15	9.42	15.20	3.28	A	6.40	A++
	7	18	—	—	2.00	5.00	—	—	1.00	7.00	8.20	0.50	2.16	3.43	2.15	10.43	15.20	3.24	A	6.40	A++
	7	24	—	—	1.79	5.81	—	—	1.00	7.60	9.00	0.55	2.30	3.43	2.50	11.11	15.20	3.30	A	6.40	A++
	9	15	—	—	2.50	4.40	—	—	1.00	6.90	8.50	0.50	1.95	3.43	2.15	9.42	15.20	3.54	A	6.20	A++
	9	18	—	—	2.33	4.67	—	—	1.00	7.00	8.50	0.50	2.00	3.43	2.15	9.66	15.20	3.50	A	6.20	A++
	9	24	—	—	2.11	5.49	—	—	1.00	7.60	9.00	0.55	2.35	3.43	2.50	11.35	15.20	3.23	A	6.40	A++
	12	12	—	—	3.50	3.50	—	—	1.00	7.00	8.20	0.50	2.10	3.43	2.15	10.14	15.20	3.33	A	6.40	A++
	12	15	—	—	3.37	4.23	—	—	1.00	7.60	9.00	0.50	2.32	3.43	2.15	11.21	15.20	3.28	A	6.40	A++
	12	18	—	—	3.10	4.40	—	—	1.00	7.50	9.00	0.50	2.30	3.43	2.15	11.11	15.20	3.26	A	6.20	A++
	12	24	—	—	2.66	4.94	—	—	1.00	7.60	9.00	0.55	2.32	3.43	2.50	11.21	15.20	3.28	A	6.40	A++
	18	18	—	—	3.80	3.80	—	—	1.00	7.60	9.00	0.55	2.32	3.43	2.50	11.21	15.20	3.28	A	6.40	A++
	18	24	—	—	3.30	4.30	—	—	1.00	7.60	9.00	0.55	2.32	3.43	2.50	11.21	15.20	3.28	A	6.40	A++
1x3	7	7	9	—	2.00	2.00	2.50	—	1.20	6.50	8.70	0.55	2.00	3.43	2.50	9.66	15.20	3.25	A	6.60	A++
	7	7	12	—	2.00	2.00	3.50	—	1.20	7.50	9.00	0.55	2.12	3.43	2.50	10.24	15.20	3.54	A	6.60	A++
	7	7	15	—	1.81	1.81	3.98	—	1.20	7.60	9.00	0.55	2.12	3.43	2.50	10.24	15.20	3.58	A	6.60	A++
	7	7	18	—	1.69	1.69	4.22	—	1.20	7.60	9.00	0.55	2.12	3.43	2.50	10.24	15.20	3.58	A	6.60	A++
	7	7	24	—	1.45	1.45	4.70	—	1.20	7.60	9.00	0.55	2.12	3.43	3.50	10.24	15.20	3.58	A	6.80	A++
	7	9	9	—	2.00	2.50	2.50	—	1.20	7.00	9.00	0.55	2.12	3.43	2.50	10.24	15.20	3.30	A	6.80	A++
	7	9	12	—	1.90	2.38	3.33	—	1.20	7.60	9.00	0.55	2.12	3.43	2.50	10.24	15.20	3.58	A	6.80	A++
	7	9	15	—	1.71	2.13	3.76	—	1.20	7.60	9.00	0.55	2.12	3.43	2.50	10.24	15.20	3.58	A	7.00	A++
	7	9	18	—	1.60	2.00	4.00	—	1.20	7.60	9.00	0.55	2.12	3.43	2.50	10.24	15.20	3.58	A	7.00	A++
	7	12	12	—	1.69	2.96	2.96	—	1.20	7.60	9.00	0.55	2.12	3.43	2.50	10.24	15.20	3.58	A	7.00	A++
	7	12	15	—	1.54	2.69	3.38	—	1.20	7.60	9.00	0.55	2.12	3.43	2.50	10.24	15.20	3.58	A	7.00	A++
	7	12	18	—	1.45	2.53	3.62	—	1.20	7.60	9.00	0.55	2.12	3.43	2.50	10.24	15.20	3.58	A	7.00	A++
	9	9	9	—	2.50	2.50	2.50	—	1.20	7.60	9.00	0.55	2.00	3.43	2.50	9.66	15.20	3.80	A	7.00	A++
	9	9	12	—	2.24	2.24	3.13	—	1.20	7.60	9.00	0.55	2.00	3.43	2.50	9.66	15.20	3.80	A	7.00	A++
	9	9	15	—	2.02	2.02	3.56	—	1.20	7.60	9.00	0.55	2.00	3.43	2.50	9.66	15.20	3.80	A	7.00	A++
	9	9	18	—	1.90	1.90	3.80	—	1.20	7.60	9.00	0.55	2.00	3.43	2.50	9.66	15.20	3.80	A	7.00	A++
	9	12	12	—	2.00	2.80	2.80	—	1.20	7.60	9.00	0.55	2.00	3.43	2.50	9.66	15.20	3.80	A	7.00	A++
	12	12	12	—	2.53	2.53	2.53	—	1.20	7.60	9.00	0.55	2.00	3.43	2.50	9.66	15.20	3.80	A	7.00	A++
	12	12	15	—	2.33	2.33	2.93	—	1.20	7.60	9.00	0.55	2.00	3.43	2.50	9.66	15.20	3.80	A	7.00	A++
	12	12	18	—	2.22	2.22	3.17	—	1.20	7.60	9.00	0.55	2.00	3.43	2.50	9.66	15.20	3.80	A	7.00	A++
1x4	7	7	7	7	1.90	1.90	1.90	1.90	1.50	7.60	9.00	0.55	1.98	3.43	2.85	9.57	15.20	3.84	A	7.00	A++
	7	7	7	9	1.79	1.79	1.79	2.24	1.50	7.60	9.00	0.55	1.98	3.43	2.85	9.57	15.20	3.84	A	7.00	A++
	7	7	7	12	1.60	1.60	1.60	2.80	1.50	7.60	9.00	0.55	1.98	3.43	2.85	9.57	15.20	3.84	A	7.00	A++
	7	7	7	15	1.46	1.46	1.46	3.22	1.50	7.60	9.00	0.55	1.98	3.43	2.85	9.57	15.20	3.84	A	7.00	A++
	7	7	7	18	1.38	1.38	1.38	3.45	1.50	7.60	9.00	0.55	1.98	3.43	2.85	9.57	15.20	3.84	A	7.00	A++
	7	7	9	9	1.69	1.69	2.11	2.11	1.50	7.60	9.00	0.55	1.98	3.43	2.85	9.57	15.20	3.84	A	7.00	A++
	7	7	9	12	1.52	1.52	1.90	2.66	1.50	7.60	9.00	0.55	1.98	3.43	2.85	9.57	15.20	3.84	A	7.00	A++
	7	9	9	9	1.60	2.00	2.00	2.00	1.50	7.60	9.00	0.55	1.98	3.43	2.85	9.57	15.20	3.84	A	7.00	A++
	7	9	9	12	1.45	1.81	1.81	2.53	1.50	7.60	9.00	0.55	1.98	3.43	2.85	9.57	15.20	3.84	A	7.00	A++
	9	9	9	9	1.90	1.90	1.90	1.90	1.50	7.60	9.00	0.55	1.98	3.43	2.85	9.57	15.20	3.84	A	7.00	A++
	9	9	9	12	1.73	1.73	1.73	2.42	1.50	7.60	9.00	0.55	1.98	3.43	2.85	9.57	15.20	3.84	A	7.00	A++

4U26HS1ERA

HEATING

Comb.	Combinations				Rated capacity /kW (Nom. heating)				Total heating capacity(kW)			Total power input(kW)			Total current(A)@230V			COP(W/W)	ENERGY LABEL	SCOP (W/W)	ENERGY LABEL
	UnitA	UnitB	UnitC	UnitD	UnitA	UnitB	UnitC	UnitD	Min.data	Rated data	Max.data	Min.data	Rated data	Max.data	Min.data	Rated data	Max.data	Rated capacity			
1x1	7	—	—	—	2.3	—	—	—	1.00	2.30	4.00	0.55	0.60	1.50	2.44	2.66	6.65	3.83	A	3.65	A
	9	—	—	—	2.9	—	—	—	1.00	2.90	4.10	0.55	0.80	1.40	2.44	3.55	6.21	3.63	A	3.65	A
	12	—	—	—	3.8	—	—	—	1.00	3.80	4.10	0.55	1.04	1.50	2.44	4.61	6.65	3.65	A	3.65	A
	15	—	—	—	5.4	—	—	—	1.30	5.40	6.00	0.47	1.47	1.90	2.09	6.52	8.43	3.67	A	3.65	A
	18	—	—	—	5.5	—	—	—	1.50	5.50	6.00	0.55	1.50	2.60	2.44	6.65	11.54	3.67	A	3.65	A
	24	—	—	—	7.0	—	—	—	1.50	7.00	8.60	0.55	1.91	2.60	2.44	8.47	11.54	3.67	A	3.65	A
1x2	7	15	—	—	2.30	5.40	—	—	1.20	7.70	9.50	0.50	2.10	3.43	2.15	9.32	15.20	3.67	A	3.75	A
	7	18	—	—	2.30	5.50	—	—	1.20	7.80	9.50	0.50	2.13	3.43	2.15	9.45	15.20	3.66	A	3.75	A
	7	24	—	—	2.13	6.47	—	—	1.20	8.60	9.50	0.55	2.33	3.43	2.50	10.34	15.20	3.69	A	3.80	A
	9	15	—	—	2.90	5.40	—	—	1.20	8.30	9.50	0.50	2.28	3.43	2.15	10.12	15.20	3.64	A	3.80	A
	9	18	—	—	2.90	5.50	—	—	1.20	8.40	9.50	0.50	2.30	3.43	2.15	10.20	15.20	3.65	A	3.80	A
	9	24	—	—	2.52	6.08	—	—	1.20	8.60	9.50	0.55	2.35	3.43	2.50	10.43	15.20	3.66	A	3.80	A
	12	12	—	—	3.80	3.80	—	—	1.20	7.60	8.20	0.50	2.10	3.43	2.15	9.32	15.20	3.62	A	3.75	A
	12	15	—	—	3.55	5.05	—	—	1.20	8.60	9.50	0.50	2.36	3.43	2.15	10.47	15.20	3.64	A	3.80	A
	12	18	—	—	3.40	5.00	—	—	1.20	8.40	9.50	0.50	2.33	3.43	2.15	10.32	15.20	3.61	A	3.80	A
	12	24	—	—	3.03	5.57	—	—	1.20	8.60	9.50	0.55	2.34	3.43	2.50	10.38	15.20	3.67	A	3.80	A
	18	18	—	—	4.30	4.30	—	—	1.20	8.60	9.50	0.55	2.35	3.43	2.50	10.43	15.20	3.66	A	3.80	A
	18	24	—	—	3.78	4.82	—	—	1.50	8.60	9.50	0.55	2.35	3.43	2.50	10.43	15.20	3.66	A	3.80	A
1x3	7	7	—	—	2.30	2.30	2.90	—	1.50	7.50	9.50	0.55	2.07	3.43	2.50	9.18	15.20	3.62	A	3.90	A
	7	7	12	—	2.30	2.30	3.80	—	1.50	8.40	9.50	0.55	2.16	3.43	2.50	9.58	15.20	3.89	A	3.90	A
	7	7	15	—	1.98	1.98	4.64	—	1.50	8.60	9.50	0.55	2.26	3.43	2.50	10.02	15.20	3.81	A	3.90	A
	7	7	18	—	1.96	1.96	4.68	—	1.50	8.60	9.50	0.55	2.26	3.43	2.50	10.02	15.20	3.81	A	3.90	A
	7	7	24	—	1.71	1.71	5.19	—	1.80	8.60	9.50	0.55	2.31	3.43	2.50	10.24	15.20	3.72	A	3.80	A
	7	9	9	—	2.30	2.90	2.90	—	1.50	8.10	9.50	0.55	2.21	3.43	2.50	9.80	15.20	3.67	A	3.90	A
	7	9	12	—	2.20	2.77	3.63	—	1.50	8.60	9.50	0.55	2.21	3.43	2.50	9.80	15.20	3.89	A	3.90	A
	7	9	15	—	1.87	2.35	4.38	—	1.50	8.60	9.50	0.55	2.26	3.43	2.50	10.02	15.20	3.81	A	3.90	A
	7	9	18	—	1.85	2.33	4.42	—	1.50	8.60	9.50	0.55	2.26	3.43	2.50	10.02	15.20	3.81	A	3.90	A
	7	12	12	—	2.00	3.30	3.30	—	1.50	8.60	9.50	0.55	2.21	3.43	2.50	9.80	15.20	3.89	A	3.90	A
	7	12	15	—	1.72	2.84	4.04	—	1.50	8.60	9.50	0.55	2.26	3.43	2.50	10.02	15.20	3.81	A	3.90	A
	7	12	18	—	1.71	2.82	4.08	—	1.50	8.60	9.50	0.55	2.26	3.43	2.50	10.02	15.20	3.81	A	3.90	A
	9	9	9	—	2.87	2.87	2.87	—	1.50	8.60	9.50	0.55	2.18	3.43	2.50	9.66	15.20	3.95	A	4.00	A+
	9	9	12	—	2.60	2.60	3.40	—	1.50	8.60	9.50	0.55	2.18	3.43	2.50	9.66	15.20	3.95	A	4.00	A+
	9	9	15	—	2.23	2.23	4.15	—	1.50	8.60	9.50	0.55	2.18	3.43	2.50	9.66	15.20	3.95	A	4.00	A+
	9	9	18	—	2.21	2.21	4.19	—	1.50	8.60	9.50	0.55	2.18	3.43	2.50	9.66	15.20	3.95	A	4.00	A+
	9	12	12	—	2.38	3.11	3.11	—	1.50	8.60	9.50	0.55	2.18	3.43	2.50	9.66	15.20	3.95	A	4.00	A+
	12	12	12	—	2.87	2.87	2.87	—	1.50	8.60	9.50	0.55	2.18	3.43	2.50	9.66	15.20	3.95	A	4.00	A+
	12	12	15	—	2.51	2.51	3.57	—	1.50	8.60	9.50	0.55	2.18	3.43	2.50	9.66	15.20	3.95	A	4.00	A+
	12	12	18	—	2.49	2.49	3.61	—	1.50	8.60	9.50	0.55	2.18	3.43	2.50	9.66	15.20	3.95	A	4.00	A+
1x4	7	7	7	7	2.15	2.15	2.15	2.15	1.80	8.60	9.50	0.55	2.15	3.43	2.85	9.54	15.20	4.00	A	4.00	A+
	7	7	7	9	2.02	2.02	2.02	2.54	1.80	8.60	9.50	0.55	2.15	3.43	2.85	9.54	15.20	4.00	A	4.00	A+
	7	7	7	12	1.85	1.85	1.85	3.05	1.80	8.60	9.50	0.55	2.15	3.43	2.85	9.54	15.20	4.00	A	4.00	A+
	7	7	7	15	1.61	1.61	1.61	3.78	1.80	8.60	9.50	0.55	2.15	3.43	2.85	9.54	15.20	4.00	A	4.00	A+
	7	7	7	18	1.60	1.60	1.60	3.81	1.80	8.60	9.50	0.55	2.15	3.43	2.85	9.54	15.20	4.00	A	4.00	A+
	7	7	9	9	1.90	1.90	2.40	2.40	1.80	8.60	9.50	0.55	2.15	3.43	2.85	9.54	15.20	4.00	A	4.00	A+
	7	7	9	12	1.75	1.75	2.21	2.89	1.80	8.60	9.50	0.55	2.15	3.43	2.85	9.54	15.20	4.00	A	4.00	A+
	7	9	9	9	1.80	2.27	2.27	2.27	1.80	8.60	9.50	0.55	2.15	3.43	2.85	9.54	15.20	4.00	A	4.00	A+
	7	9	9	12	1.66	2.10	2.10	2.75	1.80	8.60	9.50	0.55	2.15	3.43	2.85	9.54	15.20	4.00	A	4.00	A+
	9	9	9	9	2.15	2.15	2.15	2.15	1.80	8.60	9.50	0.55	2.15	3.43	2.85	9.54	15.20	4.00	A	4.00	A+
	9	9	9	12	2.00	2.00	2.00	2.61	1.80	8.60	9.50	0.55	2.15	3.43	2.85	9.54	15.20	4.00	A	4.00	A+

MATCH TABLE

4U30HS1ERA

COOLING

Comb.	Combinations				Rated capacity(kW) (Nom.cooling)				Total cooling capacity(kW)			Total power input(kW)			Total current(A)@230V			EER(W/W)	ENERGY LABEL	SEER (W/W)	ENERGY LABEL
	UnitA	UnitB	UnitC	UnitD	UnitA	UnitB	UnitC	UnitD	Min.data	Rated data	Max.data	Min.data	Rated data	Max.data	Min.data	Rated data	Max.data	Rated capacity			
1x1	7	—	—	—	2.0	—	—	—	1.00	2.00	2.80	0.50	0.56	1.30	2.22	2.48	5.77	3.57	A	6.20	A++
	9	—	—	—	2.5	—	—	—	1.00	2.50	3.10	0.50	0.70	1.34	2.22	3.11	5.93	3.57	A	6.20	A++
	12	—	—	—	3.5	—	—	—	1.00	3.50	4.10	0.50	1.00	1.50	2.22	4.44	6.65	3.50	A	6.20	A++
	15	—	—	—	4.4	—	—	—	1.30	4.40	5.20	0.50	1.30	1.90	2.22	5.77	8.43	3.38	A	6.20	A++
	18	—	—	—	5.0	—	—	—	1.50	5.00	5.40	0.50	1.50	1.90	2.22	6.65	8.43	3.33	A	6.20	A++
	24	—	—	—	6.5	—	—	—	1.50	6.50	7.40	0.50	2.00	3.00	2.22	8.87	13.31	3.25	A	6.20	A++
1x2	7	24	—	—	2.00	6.50	—	—	1.00	8.50	9.80	0.55	2.62	3.72	2.15	11.62	16.50	3.24	A	6.20	A++
	9	18	—	—	2.50	5.00	—	—	1.00	7.50	8.50	0.55	2.30	3.72	2.15	10.20	16.50	3.26	A	6.20	A++
	9	24	—	—	2.44	6.36	—	—	1.00	8.80	9.80	0.55	2.74	3.72	2.15	12.16	16.50	3.21	A	6.20	A++
	12	15	—	—	3.50	4.40	—	—	1.00	7.90	9.50	0.55	2.31	3.72	2.15	10.27	16.50	3.41	A	6.20	A++
	12	18	—	—	3.50	5.00	—	—	1.00	8.50	9.50	0.55	2.65	3.72	2.15	10.75	16.50	3.21	A	6.20	A++
	12	24	—	—	3.08	5.72	—	—	1.00	8.80	9.80	0.55	2.72	3.72	2.15	12.07	16.50	3.24	A	6.20	A++
	18	18	—	—	4.40	4.40	—	—	1.00	8.80	9.80	0.55	2.70	3.72	2.15	11.98	16.50	3.26	A	6.20	A++
	18	24	—	—	3.83	4.97	—	—	1.00	8.80	9.80	0.55	2.70	3.72	2.15	11.98	16.50	3.26	A	6.20	A++
	24	24	—	—	4.40	4.40	—	—	1.00	8.80	9.80	0.55	2.70	3.72	2.15	11.98	16.50	3.26	A	6.20	A++
1x3	7	7	18	—	1.96	1.96	4.89	—	1.50	8.80	9.80	0.55	2.40	3.72	2.50	10.65	16.50	3.67	A	6.70	A++
	7	7	24	—	1.68	1.68	5.45	—	1.50	8.80	9.80	0.55	2.50	3.72	2.50	11.09	16.50	3.52	A	6.70	A++
	7	9	12	—	2.00	2.50	3.50	—	1.50	8.00	9.80	0.55	2.30	3.72	2.50	10.20	16.50	3.48	A	6.70	A++
	7	9	15	—	1.98	2.47	4.35	—	1.50	8.80	9.80	0.55	2.40	3.72	2.50	10.65	16.50	3.67	A	6.70	A++
	7	9	18	—	1.85	2.32	4.63	—	1.50	8.80	9.80	0.55	2.40	3.72	2.50	10.65	16.50	3.67	A	6.70	A++
	7	9	24	—	1.60	2.00	5.20	—	1.50	8.80	9.80	0.55	2.50	3.72	2.50	11.09	16.50	3.52	A	6.70	A++
	7	12	12	—	1.96	3.42	3.42	—	1.50	8.80	9.80	0.55	2.40	3.72	2.50	10.65	16.50	3.67	A	6.70	A++
	7	12	15	—	1.78	3.11	3.91	—	1.50	8.80	9.80	0.55	2.40	3.72	2.50	10.65	16.50	3.67	A	6.70	A++
	7	12	18	—	1.68	2.93	4.19	—	1.50	8.80	9.80	0.55	2.40	3.72	2.50	10.65	16.50	3.67	A	6.70	A++
	7	12	24	—	1.47	2.57	4.77	—	1.50	8.80	9.80	0.55	2.50	3.72	2.50	11.09	16.50	3.52	A	6.70	A++

4U30HS1ERA

COOLING

Comb.	Combinations				Rated capacity(kW) (Nom.cooling)				Total cooling capacity(kW)			Total power input(kW)			Total current(A)@230V			EER(W/W)	ENERGY LABEL	SEER (W/W)	ENERGY LABEL
	UnitA	UnitB	UnitC	UnitD	UnitA	UnitB	UnitC	UnitD	Min.data	Rated data	Max.data	Min.data	Rated data	Max.data	Min.data	Rated data	Max.data	Rated capacity			
1x3	9	9	9	—	2.50	2.50	2.50	—	1.50	7.50	9.30	0.55	2.30	3.72	2.50	10.20	16.50	3.26	A	6.72	A++
	9	9	12	—	2.50	2.50	3.50	—	1.50	8.50	9.80	0.55	2.35	3.72	2.50	10.43	16.50	3.62	A	6.72	A++
	9	9	15	—	2.34	2.34	4.12	—	1.50	8.80	9.80	0.55	2.40	3.72	2.50	10.65	16.50	3.67	A	6.74	A++
	9	9	18	—	2.20	2.20	4.40	—	1.50	8.80	9.80	0.55	2.40	3.72	2.50	10.65	16.50	3.67	A	6.74	A++
	9	9	24	—	1.91	1.91	4.97	—	1.50	8.80	9.80	0.55	2.50	3.72	2.50	11.09	16.50	3.52	A	6.70	A++
	9	12	12	—	2.32	3.24	3.24	—	1.50	8.80	9.80	0.55	2.40	3.72	2.50	10.65	16.50	3.67	A	6.73	A++
	9	12	15	—	2.12	2.96	3.72	—	1.50	8.80	9.80	0.55	2.40	3.72	2.50	10.65	16.50	3.67	A	6.70	A++
	9	12	18	—	2.00	2.80	4.00	—	1.50	8.80	9.80	0.55	2.40	3.72	2.50	10.65	16.50	3.67	A	6.70	A++
	9	12	24	—	1.76	2.46	4.58	—	1.50	8.80	9.80	0.55	2.50	3.72	2.50	11.09	16.50	3.52	A	6.70	A++
	12	12	12	—	2.93	2.93	2.93	—	1.50	8.80	9.80	0.55	2.40	3.72	2.50	10.65	16.50	3.67	A	6.75	A++
	12	12	15	—	2.70	2.70	3.40	—	1.50	8.80	9.80	0.55	2.40	3.72	2.50	10.65	16.50	3.67	A	6.70	A++
	12	12	18	—	2.57	2.57	3.67	—	1.50	8.80	9.80	0.55	2.40	3.72	2.50	10.65	16.50	3.67	A	6.70	A++
	12	12	24	—	2.28	2.28	4.24	—	1.50	8.80	9.80	0.55	2.45	3.72	2.50	10.87	16.50	3.59	A	6.70	A++
	12	18	18	—	2.28	3.26	3.26	—	1.50	8.80	9.80	0.55	2.50	3.72	2.50	11.09	16.50	3.52	A	6.70	A++
1x4	7	7	7	7	2.00	2.00	2.00	2.00	1.50	8.00	9.80	0.55	2.44	3.72	2.85	10.83	16.50	3.28	A	6.80	A++
	7	7	7	9	2.00	2.00	2.00	2.50	1.50	8.50	9.80	0.55	2.46	3.72	2.85	10.91	16.50	3.46	A	6.80	A++
	7	7	7	12	1.85	1.85	1.85	3.24	1.50	8.80	9.80	0.55	2.46	3.72	2.85	10.91	16.50	3.58	A	6.80	A++
	7	7	7	15	1.69	1.69	1.69	3.72	1.50	8.80	9.80	0.55	2.47	3.72	2.85	10.96	16.50	3.56	A	6.80	A++
	7	7	7	18	1.60	1.60	1.60	4.00	1.50	8.80	9.80	0.55	2.47	3.72	2.85	10.96	16.50	3.56	A	6.80	A++
	7	7	7	24	1.41	1.41	1.41	4.58	1.50	8.80	9.80	0.55	2.46	3.72	2.85	10.91	16.50	3.58	A	6.70	A++
	7	7	9	9	1.96	1.96	2.44	2.44	1.50	8.80	9.80	0.55	2.46	3.72	2.85	10.91	16.50	3.58	A	6.80	A++
	7	7	9	12	1.76	1.76	2.20	3.08	1.50	8.80	9.80	0.55	2.46	3.72	2.85	10.91	16.50	3.58	A	6.80	A++
	7	7	9	15	1.61	1.61	2.02	3.55	1.50	8.80	9.80	0.55	2.44	3.72	2.85	10.83	16.50	3.61	A	6.80	A++
	7	7	9	18	1.53	1.53	1.91	3.83	1.50	8.80	9.80	0.55	2.44	3.72	2.85	10.83	16.50	3.61	A	6.80	A++
	7	7	9	24	1.35	1.35	1.69	4.40	1.50	8.80	9.80	0.55	2.45	3.72	2.85	10.87	16.50	3.59	A	6.70	A++
	7	7	12	12	1.60	1.60	2.80	2.80	1.50	8.80	9.80	0.55	2.42	3.72	2.85	10.74	16.50	3.64	A	6.80	A++
	7	7	12	15	1.48	1.48	2.59	3.25	1.50	8.80	9.80	0.55	2.43	3.72	2.85	10.78	16.50	3.62	A	6.70	A++
	7	7	12	18	1.53	1.53	1.91	3.83	1.50	8.80	9.80	0.55	2.43	3.72	2.85	10.78	16.50	3.62	A	6.70	A++
	7	9	9	9	1.85	2.32	2.32	2.32	1.50	8.80	9.80	0.55	2.43	3.72	2.85	10.78	16.50	3.62	A	7.00	A++
	7	9	9	12	1.68	2.10	2.10	2.93	1.50	8.80	9.80	0.55	2.43	3.72	2.85	10.78	16.50	3.62	A	7.00	A++
	7	9	9	15	1.54	1.93	1.93	3.40	1.50	8.80	9.80	0.55	2.43	3.72	2.85	10.78	16.50	3.62	A	7.00	A++
	7	9	9	18	1.47	1.83	1.83	3.67	1.50	8.80	9.80	0.55	2.43	3.72	2.85	10.78	16.50	3.62	A	7.00	A++
	7	9	12	12	1.53	1.91	2.68	2.68	1.50	8.80	9.80	0.55	2.31	3.72	2.85	10.25	16.50	3.81	A	7.00	A++
	7	12	12	12	1.41	2.46	2.46	2.46	1.50	8.80	9.80	0.55	2.31	3.72	2.85	10.25	16.50	3.81	A	7.00	A++
	9	9	9	9	2.20	2.20	2.20	2.20	1.50	8.80	9.80	0.55	2.32	3.72	2.85	10.28	16.50	3.80	A	7.00	A++
	9	9	9	12	2.00	2.00	2.00	2.80	1.50	8.80	9.80	0.55	2.32	3.72	2.85	10.28	16.50	3.80	A	7.00	A++
	9	9	12	12	1.83	1.83	2.57	2.57	1.50	8.80	9.80	0.55	2.32	3.72	2.85	10.28	16.50	3.80	A	7.00	A++
	9	9	12	15	1.71	1.71	2.39	3.00	1.50	8.80	9.80	0.55	2.31	3.72	2.85	10.25	16.50	3.81	A	7.00	A++
	9	9	12	18	1.63	1.63	2.28	3.26	1.50	8.80	9.80	0.55	2.31	3.72	2.85	10.25	16.50	3.81	A	7.00	A++
	9	12	12	12	1.69	2.37	2.37	2.37	1.50	8.80	9.80	0.55	2.31	3.72	2.85	10.25	16.50	3.81	A	7.00	A++
	12	12	12	12	2.20	2.20	2.20	2.20	1.50	8.80	9.80	0.55	2.31	3.72	2.85	10.25	16.50	3.81	A	7.00	A++

MATCH TABLE

4U30HS1ERA

HEATING

Comb.	Combinations				Rated capacity(kW) (Nom.cooling)				Total cooling capacity(kW)			Total power input(kW)			Total current(A)@230V			EER(W/W)	ENERGY LABEL	SEER (W/W)	ENERGY LABEL
	UnitA	UnitB	UnitC	UnitD	UnitA	UnitB	UnitC	UnitD	Min.data	Rated data	Max.data	Min.data	Rated data	Max.data	Min.data	Rated data	Max.data	Rated capacity			
1x1	7	—	—	—	2.3	—	—	—	1.00	2.30	4.00	0.55	0.60	1.50	2.44	2.66	6.65	3.83	A	3.65	A
	9	—	—	—	2.9	—	—	—	1.00	2.90	4.10	0.55	0.80	1.40	2.44	3.55	6.21	3.63	A	3.65	A
	12	—	—	—	3.8	—	—	—	1.00	3.80	4.10	0.55	1.04	1.50	2.44	4.61	6.65	3.65	A	3.65	A
	15	—	—	—	5.4	—	—	—	1.30	5.40	6.00	0.47	1.48	1.90	2.09	6.57	8.43	3.65	A	3.65	A
	18	—	—	—	5.5	—	—	—	1.50	5.50	6.00	0.55	1.52	2.60	2.44	6.74	11.54	3.62	A	3.65	A
	24	—	—	—	7.0	—	—	—	1.50	7.00	8.60	0.55	1.80	2.60	2.44	7.99	11.54	3.89	A	3.65	A
1x2	7	24	—	—	2.30	7.00	—	—	1.20	9.30	10.50	0.50	2.55	3.72	2.15	11.31	16.50	3.65	A	3.80	A
	9	18	—	—	2.90	5.50	—	—	1.20	8.40	10.50	0.50	2.30	3.72	2.15	10.20	16.50	3.65	A	3.78	A
	9	24	—	—	2.87	6.93	—	—	1.20	9.80	10.50	0.50	2.70	3.72	2.15	11.98	16.50	3.63	A	3.80	A
	12	15	—	—	3.80	5.40	—	—	1.20	9.20	10.50	0.50	2.37	3.72	2.15	10.51	16.50	3.88	A	3.80	A
	12	18	—	—	3.70	5.60	—	—	1.20	9.30	10.50	0.50	2.49	3.72	2.15	11.03	16.50	3.74	A	3.80	A
	12	24	—	—	3.45	6.35	—	—	1.20	9.80	10.50	0.50	2.70	3.72	2.15	11.98	16.50	3.63	A	3.80	A
	18	18	—	—	4.90	4.90	—	—	1.20	9.80	10.50	0.50	2.70	3.72	2.15	11.98	16.50	3.63	A	3.82	A
	18	24	—	—	4.31	5.49	—	—	1.20	9.80	10.50	0.50	2.70	3.72	2.15	11.98	16.50	3.63	A	3.80	A
	24	24	—	—	4.90	4.90	—	—	1.20	9.80	10.50	0.50	2.71	3.72	2.44	12.02	16.50	3.62	A	3.80	A
1x3	7	7	18	—	2.23	2.23	5.34	—	1.20	9.80	10.50	0.55	2.60	3.72	2.50	11.54	16.50	3.77	A	3.89	A
	7	7	24	—	1.94	1.94	5.91	—	1.50	9.80	10.50	0.55	2.70	3.72	2.50	11.98	16.50	3.63	A	3.88	A
	7	9	12	—	2.30	2.90	3.80	—	1.50	9.00	10.50	0.55	2.40	3.72	2.50	10.65	16.50	3.75	A	3.90	A
	7	9	15	—	2.13	2.68	4.99	—	1.50	9.80	10.50	0.55	2.60	3.72	2.50	11.54	16.50	3.77	A	3.90	A
	7	9	18	—	2.11	2.66	5.04	—	1.50	9.80	10.50	0.55	2.60	3.72	2.50	11.54	16.50	3.77	A	3.90	A
	7	9	24	—	1.85	2.33	5.62	—	1.50	9.80	10.50	0.55	2.70	3.72	2.50	11.98	16.50	3.63	A	3.90	A
	7	12	12	—	2.28	3.76	3.76	—	1.50	9.80	10.50	0.55	2.70	3.72	2.50	11.98	16.50	3.63	A	3.94	A
	7	12	15	—	1.96	3.24	4.60	—	1.50	9.80	10.50	0.55	2.60	3.72	2.50	11.54	16.50	3.77	A	3.92	A
	7	12	18	—	1.94	3.21	4.65	—	1.50	9.80	10.50	0.55	2.60	3.72	2.50	11.54	16.50	3.77	A	3.92	A
	7	12	24	—	1.72	2.84	5.24	—	1.50	9.80	10.50	0.55	2.70	3.72	2.50	11.98	16.50	3.63	A	3.90	A
	9	9	9	—	2.90	2.90	2.90	—	1.50	8.70	10.50	0.55	2.20	3.72	2.50	9.76	16.50	3.95	A	3.95	A
	9	9	12	—	2.90	2.90	3.80	—	1.50	9.60	10.50	0.55	2.65	3.72	2.50	11.76	16.50	3.62	A	3.90	A
	9	9	15	—	2.54	2.54	4.73	—	1.50	9.80	10.50	0.55	2.50	3.72	2.50	11.09	16.50	3.92	A	3.92	A
	9	9	18	—	2.52	2.52	4.77	—	1.50	9.80	10.50	0.55	2.50	3.72	2.50	11.09	16.50	3.92	A	3.92	A
	9	9	24	—	2.22	2.22	5.36	—	1.50	9.80	10.50	0.55	2.70	3.72	2.50	11.98	16.50	3.63	A	3.90	A
	9	12	12	—	2.71	3.55	3.55	—	1.50	9.80	10.50	0.55	2.70	3.72	2.50	11.98	16.50	3.63	A	3.93	A
	9	12	15	—	2.35	3.08	4.37	—	1.50	9.80	10.50	0.55	2.60	3.72	2.50	11.54	16.50	3.77	A	3.92	A
	9	12	18	—	2.33	3.05	4.42	—	1.50	9.80	10.50	0.55	2.60	3.72	2.50	11.54	16.50	3.77	A	3.92	A
	9	12	24	—	2.07	2.72	5.01	—	1.50	9.80	10.50	0.55	2.70	3.72	2.50	11.98	16.50	3.63	A	3.90	A

4U30HS1ERA

HEATING

Comb.	Combinations				Rated capacity(kW) (Nom.cooling)				Total cooling capacity(kW)			Total power input(kW)			Total current(A)@230V			EER(W/W)	ENERGY LABEL	SEER (W/W)	ENERGY LABEL
	UnitA	UnitB	UnitC	UnitD	UnitA	UnitB	UnitC	UnitD	Min.data	Rated data	Max.data	Min.data	Rated data	Max.data	Min.data	Rated data	Max.data	Rated capacity			
1x3	12	12	12	—	3.27	3.27	3.27	—	1.50	9.80	10.50	0.55	2.58	3.72	2.50	11.45	16.50	3.80	A	3.95	A
	12	12	15	—	2.86	2.86	4.07	—	1.50	9.80	10.50	0.55	2.60	3.72	2.50	11.54	16.50	3.77	A	3.90	A
	12	12	18	—	2.84	2.84	4.11	—	1.50	9.80	10.50	0.55	2.60	3.72	2.50	11.54	16.50	3.77	A	3.90	A
	12	12	24	—	2.55	2.55	4.70	—	1.50	9.80	10.50	0.55	2.65	3.72	2.50	11.76	16.50	3.70	A	3.85	A
	12	18	18	—	2.52	3.64	3.64	—	1.50	9.80	10.50	0.55	2.75	3.72	2.50	12.20	16.50	3.56	B	3.90	A
1x4	7	7	7	7	2.30	2.30	2.30	2.30	1.50	9.20	10.50	0.55	2.38	3.72	2.85	10.56	16.50	3.87	A	3.95	A
	7	7	7	9	2.30	2.30	2.30	2.90	1.50	9.80	10.50	0.55	2.70	3.72	2.85	11.98	16.50	3.63	A	3.95	A
	7	7	7	12	2.11	2.11	2.11	3.48	1.80	9.80	10.50	0.55	2.60	3.72	2.85	11.54	16.50	3.77	A	3.95	A
	7	7	7	15	1.83	1.83	1.83	4.30	1.80	9.80	10.50	0.55	2.60	3.72	2.85	11.54	16.50	3.77	A	3.98	A
	7	7	7	18	1.82	1.82	1.82	4.35	1.80	9.80	10.50	0.55	2.60	3.72	2.85	11.54	16.50	3.77	A	3.98	A
	7	7	7	24	1.62	1.62	1.62	4.94	1.80	9.80	10.50	0.55	2.70	3.72	2.85	11.98	16.50	3.63	A	3.90	A
	7	7	9	9	2.17	2.17	2.73	2.73	1.80	9.80	10.50	0.55	2.60	3.72	2.85	11.54	16.50	3.77	A	3.92	A
	7	7	9	12	1.99	1.99	2.52	3.30	1.80	9.80	10.50	0.55	2.60	3.72	2.85	11.54	16.50	3.77	A	3.94	A
	7	7	9	15	1.75	1.75	2.20	4.10	1.80	9.80	10.50	0.55	2.60	3.72	2.85	11.54	16.50	3.77	A	3.95	A
	7	7	9	18	1.73	1.73	2.19	4.15	1.80	9.80	10.50	0.55	2.60	3.72	2.85	11.54	16.50	3.77	A	3.95	A
	7	7	9	24	1.55	1.55	1.96	4.73	1.80	9.80	10.50	0.55	2.65	3.72	2.85	11.76	16.50	3.70	A	3.95	A
	7	7	12	12	1.85	1.85	3.05	3.05	1.80	9.80	10.50	0.55	2.60	3.72	2.85	11.54	16.50	3.77	A	3.97	A
	7	7	12	15	1.65	1.65	2.88	3.62	1.80	9.80	10.50	0.55	2.60	3.72	2.85	11.54	16.50	3.77	A	3.96	A
	7	7	12	18	1.62	1.62	2.68	3.88	1.80	9.80	10.50	0.55	2.60	3.72	2.85	11.54	16.50	3.77	A	3.96	A
	7	9	9	9	2.05	2.58	2.58	2.58	1.80	9.80	10.50	0.55	2.60	3.72	2.85	11.54	16.50	3.77	A	4.00	A+
	7	9	9	12	1.89	2.39	2.39	3.13	1.80	9.80	10.50	0.55	2.60	3.72	2.85	11.54	16.50	3.77	A	4.00	A+
	7	9	9	15	1.61	2.33	2.33	3.53	1.80	9.80	10.50	0.55	2.70	3.72	2.85	11.98	16.50	3.63	A	4.00	A+
	7	9	9	18	1.66	2.09	2.09	3.96	1.80	9.80	10.50	0.55	2.70	3.72	2.85	11.98	16.50	3.63	A	4.00	A+
	7	9	12	12	1.76	2.22	2.91	2.91	1.80	9.80	10.50	0.55	2.39	3.72	2.85	10.58	16.50	4.11	A	4.00	A+
	7	12	12	12	1.65	2.72	2.72	2.72	1.80	9.80	10.50	0.55	2.39	3.72	2.85	10.58	16.50	4.11	A	4.00	A+
	9	9	9	9	2.45	2.45	2.45	2.45	1.80	9.80	10.50	0.55	2.39	3.72	2.85	10.60	16.50	4.10	A	4.00	A+
	9	9	9	12	2.27	2.27	2.27	2.98	1.80	9.80	10.50	0.55	2.39	3.72	2.85	10.60	16.50	4.10	A	4.00	A+
	9	9	12	12	2.12	2.12	2.78	2.78	1.80	9.80	10.50	0.55	2.39	3.72	2.85	10.58	16.50	4.11	A	4.00	A+
	9	9	12	15	2.03	2.03	2.66	3.08	1.80	9.80	10.50	0.55	2.39	3.72	2.85	10.58	16.50	4.11	A	4.00	A+
	9	9	12	18	1.88	1.88	2.47	3.57	1.80	9.80	10.50	0.55	2.39	3.72	2.85	10.58	16.50	4.11	A	4.00	A+
	9	12	12	12	1.99	2.60	2.60	2.60	1.80	9.80	10.50	0.55	2.39	3.72	2.85	10.58	16.50	4.11	A	4.00	A+
	12	12	12	12	2.45	2.45	2.45	2.45	1.80	9.80	10.50	0.55	2.39	3.72	2.85	10.58	16.50	4.11	A	4.00	A+

MATCH TABLE

5U34HS1ERA

COOLING

Comb.	Combinations					Rated capacity(kW) (Nom.cooling)					Total cooling capacity(kW)			Total power input(kW)			Total current(A)@230V			EER(W/W)	ENERGY LABEL	SEER (W/W)	ENERGY LABEL
	UnitA	UnitB	UnitC	UnitD	UnitE	UnitA	UnitB	UnitC	UnitD	UnitE	Min.data	Rated data	Max.data	Min.data	Rated data	Max.data	Min.data	Rated data	Max.data	Rated capacity			
1x1	7	—	—	—	—	2.0	—	—	—	—	1.00	2.00	2.80	0.50	0.62	1.30	2.20	2.77	5.77	3.21	A	5.90	A+
	9	—	—	—	—	2.5	—	—	—	—	1.00	2.50	3.10	0.50	0.78	1.34	2.20	3.46	5.93	3.21	A	5.90	A+
	12	—	—	—	—	3.5	—	—	—	—	1.00	3.50	4.10	0.50	1.09	1.50	2.20	4.84	6.65	3.21	A	5.90	A+
	15	—	—	—	—	4.4	—	—	—	—	1.30	4.40	5.20	0.50	1.35	1.90	2.22	5.99	8.43	3.26	A	5.90	A+
	18	—	—	—	—	5.0	—	—	—	—	1.50	5.00	5.40	0.50	1.56	1.90	2.20	6.92	8.43	3.21	A	5.90	A+
	24	—	—	—	—	6.5	—	—	—	—	1.50	6.50	7.40	0.50	2.02	3.00	2.20	8.96	13.31	3.22	A	5.90	A+
1x2	7	18	—	—	—	2.00	5.00	—	—	—	1.00	7.00	8.20	0.50	2.18	3.92	2.15	9.67	17.40	3.21	A	6.15	A++
	7	24	—	—	—	2.00	6.50	—	—	—	1.00	8.50	10.20	0.50	2.65	3.92	2.15	11.76	17.40	3.21	A	6.15	A++
	9	15	—	—	—	2.00	4.40	—	—	—	1.00	6.40	8.50	0.50	1.95	3.92	2.15	8.65	17.40	3.28	A	6.15	A++
	9	18	—	—	—	2.50	5.00	—	—	—	1.00	7.50	8.50	0.50	2.34	3.92	2.15	10.38	17.40	3.21	A	6.15	A++
	9	24	—	—	—	2.50	6.50	—	—	—	1.00	9.00	10.50	0.50	2.80	3.92	2.15	12.42	17.40	3.21	A	6.15	A++
	12	15	—	—	—	3.50	4.40	—	—	—	1.00	7.90	9.50	0.50	2.42	3.92	2.15	10.74	17.40	3.26	A	6.20	A++
	12	18	—	—	—	3.50	5.00	—	—	—	1.00	8.50	9.50	0.50	2.65	3.92	2.15	11.76	17.40	3.21	A	6.20	A++
	12	24	—	—	—	3.50	6.50	—	—	—	1.00	10.00	11.00	0.50	3.10	3.92	2.15	13.75	17.40	3.23	A	6.15	A++
	15	18	—	—	—	4.40	5.00	—	—	—	1.00	9.40	10.80	0.50	2.83	3.92	2.15	12.56	17.40	3.32	A	6.20	A++
	18	18	—	—	—	5.00	5.00	—	—	—	1.00	10.00	10.80	0.50	3.10	3.92	2.15	13.74	17.40	3.23	A	6.20	A++
	18	24	—	—	—	4.35	5.65	—	—	—	1.00	10.00	11.00	0.50	3.10	3.92	2.15	13.75	17.40	3.22	A	6.20	A++
	24	24	—	—	—	5.00	5.00	—	—	—	1.00	10.00	11.00	0.50	3.10	3.92	2.15	13.75	17.40	3.23	A	6.15	A++
1x3	7	7	12	—	—	2.00	2.00	3.50	—	—	1.50	7.50	9.70	0.55	2.34	3.92	2.50	10.38	17.40	3.21	A	6.40	A++
	7	7	15	—	—	2.00	2.00	4.40			1.50	8.40	11.00	0.55	2.61	3.92	2.50	11.58	17.40	3.22	A	6.42	A++
	7	7	18	—	—	2.00	2.00	5.00	—	—	1.50	9.00	11.00	0.55	2.80	3.92	2.50	12.42	17.40	3.21	A	6.42	A++
	7	7	24	—	—	1.90	1.90	6.19	—	—	1.50	10.00	11.00	0.55	3.10	3.92	2.50	13.75	17.40	3.23	A	6.40	A++
	7	9	9	—	—	2.00	2.50	2.50	—	—	1.50	7.00	9.00	0.55	2.15	3.92	2.50	9.54	17.40	3.26	A	6.43	A++
	7	9	12	—	—	2.00	2.50	3.50	—	—	1.50	8.00	10.00	0.55	2.47	3.92	2.50	10.96	17.40	3.24	A	6.40	A++
	7	9	15	—	—	2.00	2.50	4.40	—	—	1.50	8.90	11.00	0.55	2.77	3.92	2.50	12.29	17.40	3.21	A	6.40	A++
	7	9	18	—	—	2.00	2.50	5.00	—	—	1.50	9.50	11.00	0.55	2.96	3.92	2.50	13.13	17.40	3.21	A	6.40	A++
	7	9	24	—	—	1.82	2.27	5.91	—	—	1.50	10.00	11.00	0.55	3.10	3.92	2.50	13.75	17.40	3.23	A	6.40	A++
	7	12	12	—	—	2.00	3.50	3.50	—	—	1.50	9.00	11.00	0.55	2.80	3.92	2.50	12.42	17.40	3.21	A	6.43	A++
	7	12	15	—	—	2.00	3.50	4.40	—	—	1.50	9.90	11.00	0.55	3.08	3.92	2.50	13.66	17.40	3.21	A	6.42	A++
	7	12	18	—	—	1.90	3.33	4.76	—	—	1.50	10.00	11.00	0.55	3.10	3.92	2.50	13.75	17.40	3.22	A	6.42	A++
	7	12	24	—	—	1.67	2.92	5.42	—	—	1.50	10.00	11.00	0.55	3.10	3.92	2.50	13.75	17.40	3.23	A	6.40	A++
	9	9	9	—	—	2.50	2.50	2.50	—	—	1.50	7.50	9.30	0.55	2.30	3.92	2.50	10.20	17.40	3.26	A	6.45	A++
	9	9	12	—	—	2.50	2.50	3.50	—	—	1.50	8.50	10.30	0.55	2.60	3.92	2.50	11.54	17.40	3.27	A	6.45	A++
	9	9	15	—	—	2.50	2.50	4.40	—	—	1.50	9.40	11.00	0.55	2.92	3.92	2.50	12.95	17.40	3.22	A	6.43	A++
	9	9	18	—	—	2.50	2.50	5.00	—	—	1.50	10.00	11.00	0.55	3.10	3.92	2.50	13.75	17.40	3.23	A	6.43	A++
	9	9	24	—	—	2.17	2.17	5.65	—	—	1.50	10.00	11.00	0.55	3.10	3.92	2.50	13.75	17.40	3.23	A	6.40	A++
	9	12	12	—	—	2.50	3.50	3.50	—	—	1.50	9.50	11.00	0.55	2.90	3.92	2.50	12.87	17.40	3.28	A	6.40	A++
	9	12	15	—	—	2.40	3.37	4.23	—	—	1.50	10.00	11.00	0.55	3.06	3.92	2.50	13.58	17.40	3.27	A	6.40	A++
	9	12	18	—	—	2.27	3.18	4.55	—	—	1.50	10.00	11.00	0.55	3.05	3.92	2.50	13.53	17.40	3.28	A	6.40	A++
	9	12	24	—	—	2.00	2.80	5.20	—	—	1.50	10.00	11.00	0.55	3.05	3.92	2.50	13.53	17.40	3.28	A	6.30	A++

5U34HS1ERA

COOLING

Comb.	Combinations					Rated capacity(kW) (Nom.cooling)					Total cooling capacity(kW)			Total power input(kW)			Total current(A)@230V			EER(W/W)	ENERGY LABEL	SEER (W/W)	ENERGY LABEL
	UnitA	UnitB	UnitC	UnitD	UnitE	UnitA	UnitB	UnitC	UnitD	UnitE	Min.data	Rated data	Max.data	Min.data	Rated data	Max.data	Min.data	Rated data	Max.data	Rated capacity			
1x3	12	12	12	—	—	3.33	3.33	3.33	—	—	1.50	10.00	11.00	0.55	3.05	3.92	2.50	13.53	17.40	3.28	A	6.40	A++
	12	12	15	—	—	3.07	3.07	3.86	—	—	1.50	10.00	11.00	0.55	3.05	3.92	2.50	13.53	17.40	3.28	A	6.40	A++
	12	12	18	—	—	2.92	2.92	4.17	—	—	1.50	10.00	11.00	0.55	3.05	3.92	2.50	13.53	17.40	3.28	A	6.40	A++
	12	12	24	—	—	2.59	2.59	4.81	—	—	1.50	10.00	11.00	0.55	3.05	3.92	2.50	13.53	17.40	3.28	A	6.40	A++
	12	18	18	—	—	2.59	3.70	3.70	—	—	1.50	10.00	11.00	0.55	3.05	3.92	2.50	13.53	17.40	3.28	A	6.40	A++
	18	18	18	—	—	3.33	3.33	3.33	—	—	1.80	10.00	11.00	0.55	3.05	3.92	2.50	13.53	17.40	3.28	A	6.40	A++
1x4	7	7	7	7	—	2.00	2.00	2.00	2.00	—	1.80	8.00	11.00	0.55	2.32	3.92	2.50	10.29	17.40	3.45	A	6.60	A++
	7	7	7	9	—	2.00	2.00	2.00	2.50	—	1.80	8.50	11.00	0.55	2.50	3.92	2.50	11.09	17.40	3.40	A	6.60	A++
	7	7	7	12	—	2.00	2.00	2.00	3.50	—	1.80	9.50	11.00	0.55	2.87	3.92	2.50	12.73	17.40	3.31	A	6.60	A++
	7	7	7	15	—	1.92	1.92	1.92	4.23	—	1.80	10.00	11.00	0.55	2.87	3.92	2.50	12.73	17.40	3.48	A	6.60	A++
	7	7	7	18	—	1.82	1.82	1.82	4.55	—	1.80	10.00	11.00	0.55	2.87	3.92	2.50	12.73	17.40	3.48	A	6.60	A++
	7	7	7	24	—	1.60	1.60	1.60	5.20	—	1.80	10.00	11.00	0.55	2.87	3.92	2.50	12.73	17.40	3.48	A	6.60	A++
	7	7	9	9	—	2.00	2.00	2.50	2.50	—	1.80	9.00	11.00	0.55	2.70	3.92	2.50	11.98	17.40	3.33	A	6.60	A++
	7	7	9	12	—	2.00	2.00	2.50	3.50	—	1.80	10.00	11.00	0.55	2.87	3.92	2.50	12.73	17.40	3.48	A	6.60	A++
	7	7	9	15	—	1.83	1.83	2.29	4.04	—	1.80	10.00	11.00	0.55	2.87	3.92	2.50	12.73	17.40	3.48	A	6.60	A++
	7	7	9	18	—	1.74	1.74	2.17	4.35	—	1.80	10.00	11.00	0.55	2.87	3.92	2.50	12.73	17.40	3.48	A	6.60	A++
	7	7	9	24	—	1.54	1.54	1.92	5.00	—	1.80	10.00	11.00	0.55	2.87	3.92	2.50	12.73	17.40	3.48	A	6.60	A++
	7	7	12	12	—	1.82	1.82	3.18	3.18	—	1.80	10.00	11.00	0.55	2.78	3.92	2.50	12.32	17.40	3.60	A	6.80	A++
	7	7	12	15	—	1.68	1.68	2.94	3.70	—	1.80	10.00	11.00	0.55	2.78	3.92	2.50	12.32	17.40	3.60	A	6.80	A++
	7	7	12	18	—	1.60	1.60	2.80	4.00	—	1.80	10.00	11.00	0.55	2.78	3.92	2.50	12.32	17.40	3.60	A	6.80	A++
	7	9	9	9	—	2.00	2.50	2.50	2.50	—	1.80	9.50	11.00	0.55	2.64	3.92	2.50	11.69	17.40	3.60	A	6.80	A++
	7	9	9	12	—	1.90	2.38	2.38	3.33	—	1.80	10.00	11.00	0.55	2.78	3.92	2.50	12.32	17.40	3.60	A	6.80	A++
	7	9	9	15	—	1.75	2.19	2.19	3.86	—	1.80	10.00	11.00	0.55	2.78	3.92	2.50	12.32	17.40	3.60	A	6.80	A++
	7	9	9	18	—	1.67	2.08	2.08	4.17	—	1.80	10.00	11.00	0.55	2.78	3.92	2.50	12.32	17.40	3.60	A	6.80	A++
	7	9	12	12	—	1.74	2.17	3.04	3.04	—	1.80	10.00	10.80	0.55	2.78	3.92	2.50	12.32	17.40	3.60	A	7.00	A++
	7	12	12	12	—	1.60	2.80	2.80	2.80	—	1.80	10.00	11.00	0.55	2.76	3.92	2.50	12.24	17.40	3.62	A	7.00	A++
	9	9	9	9	—	2.50	2.50	2.50	2.50	—	1.80	10.00	11.00	0.55	2.78	3.92	2.50	12.32	17.40	3.60	A	7.00	A++
	9	9	9	12	—	2.27	2.27	2.27	3.18	—	1.80	10.00	11.00	0.55	2.78	3.92	2.50	12.32	17.40	3.60	A	7.00	A++
	9	9	9	15	—	2.10	2.10	2.10	3.70	—	1.80	10.00	11.00	0.55	2.78	3.92	2.50	12.32	17.40	3.60	A	7.00	A++
	9	9	9	18	—	2.00	2.00	2.00	4.00	—	1.80	10.00	11.00	0.55	2.78	3.92	2.50	12.32	17.40	3.60	A	7.00	A++
	9	9	12	12	—	2.08	2.08	2.92	2.92	—	1.80	10.00	11.00	0.55	2.78	3.92	2.50	12.32	17.40	3.60	A	7.00	A++
	9	12	12	12	—	1.92	2.69	2.69	2.69	—	1.80	10.00	11.00	0.55	2.78	3.92	2.50	12.32	17.40	3.60	A	7.00	A++
	12	12	12	12	—	2.50	2.50	2.50	2.50	—	1.80	10.00	11.00	0.55	2.78	3.92	2.50	12.32	17.40	3.60	A	7.00	A++
1×5	7	7	7	7	7	2.00	2.00	2.00	2.00	2.00	2.00	10.00	11.00	0.55	2.76	3.92	2.50	12.24	17.40	3.62	A	7.10	A++
	7	7	7	7	9	1.90	1.90	1.90	1.90	2.38	2.00	10.00	11.00	0.55	2.76	3.92	2.50	12.24	17.40	3.62	A	7.10	A++
	7	7	7	7	12	1.74	1.74	1.74	1.74	3.04	2.00	10.00	11.00	0.55	2.76	3.92	2.50	12.24	17.40	3.62	A	7.10	A++
	7	7	7	9	9	1.82	1.82	1.82	2.27	2.27	2.00	10.00	11.00	0.55	2.76	3.92	2.50	12.24	17.40	3.62	A	7.10	A++
	7	7	7	9	12	1.67	1.67	1.67	2.08	2.92	2.00	10.00	11.00	0.55	2.76	3.92	2.50	12.24	17.40	3.62	A	7.10	A++
	7	7	7	12	12	1.54	1.54	1.54	2.69	2.69	2.00	10.00	11.00	0.55	2.76	3.92	2.50	12.24	17.40	3.62	A	7.10	A++
	7	7	9	9	9	1.74	1.74	2.17	2.17	2.17	2.00	10.00	11.00	0.55	2.76	3.92	2.50	12.24	17.40	3.62	A	7.10	A++
	7	7	9	9	12	1.60	1.60	2.00	2.00	2.80	2.00	10.00	11.00	0.55	2.76	3.92	2.50	12.24	17.40	3.62	A	7.10	A++
	7	9	9	9	9	1.67	2.08	2.08	2.08	2.08	2.00	10.00	11.00	0.55	2.76	3.92	2.50	12.24	17.40	3.62	A	7.10	A++
	9	9	9	9	9	2.00	2.00	2.00	2.00	2.00	2.00	10.00	11.00	0.55	2.76	3.92	2.50	12.24	17.40	3.62	A	7.10	A++
	9	9	9	9	12	1.85	1.85	1.85	1.85	2.59	2.00	10.00	11.00	0.55	2.76	3.92	2.50	12.24	17.40	3.62	A	7.10	A++
	9	9	9	12	12	1.72	1.72	1.72	2.41	2.41	2.00	10.00	11.00	0.55	2.76	3.92	2.50	12.24	17.40	3.62	A	7.10	A++

MATCH TABLE

5U34HS1ERA

HEATING

Comb.	Combinations					Rated capacity(kW) (Nom.cooling)					Total cooling capacity(kW)			Total power input(kW)			Total current(A)@230V			EER(W/W)	ENERGY LABEL	SEER (W/W)	ENERGY LABEL
	UnitA	UnitB	UnitC	UnitD	UnitE	UnitA	UnitB	UnitC	UnitD	UnitE	Min.data	Rated data	Max.data	Min.data	Rated data	Max.data	Min.data	Rated data	Max.data	Rated capacity			
1x1	7	—	—	—	—	2.3	—	—	—	—	1.00	2.30	4.00	0.50	0.63	1.50	2.22	2.80	6.65	3.65	A	3.61	A
	9	—	—	—	—	2.9	—	—	—	—	1.00	2.90	4.10	0.50	0.80	1.40	2.22	3.55	6.21	3.63	A	3.61	A
	12	—	—	—	—	3.8	—	—	—	—	1.00	3.80	4.10	0.50	1.05	1.50	2.22	4.66	6.65	3.62	A	3.61	A
	15	—	—	—	—	5.4	—	—	—	—	1.30	5.40	6.00	0.47	1.48	1.90	2.09	6.57	8.43	3.65	A	3.61	A
	18	—	—	—	—	5.5	—	—	—	—	1.50	5.50	6.00	0.55	1.50	2.60	2.44	6.65	11.54	3.67	A	3.61	A
	24	—	—	—	—	7.0	—	—	—	—	1.50	7.00	8.60	0.55	1.90	2.60	2.44	8.43	11.54	3.68	A	3.61	A
1x2	7	18	—	—	—	2.30	5.50	—	—	—	1.20	7.80	10.00	0.50	2.16	3.92	2.15	9.58	17.40	3.61	A	3.70	A
	7	24	—	—	—	2.30	7.00	—	—	—	1.20	9.30	11.50	0.50	2.58	3.92	2.15	11.45	17.40	3.60	A	3.70	A
	9	15	—	—	—	2.90	5.40	—	—	—	1.20	8.30	10.10	0.50	2.25	3.92	2.15	9.98	17.40	3.69	A	3.70	A
	9	18	—	—	—	2.90	5.50	—	—	—	1.20	8.40	10.10	0.50	2.33	3.92	2.15	10.34	17.40	3.61	A	3.70	A
	9	24	—	—	—	2.90	7.00	—	—	—	1.20	9.90	11.50	0.50	2.74	3.92	2.15	12.16	17.40	3.61	A	3.71	A
	12	15	—	—	—	3.80	5.40	—	—	—	1.20	9.20	10.10	0.50	2.52	3.92	2.15	11.18	17.40	3.65	A	3.71	A
	12	18	—	—	—	4.37	6.33	—	—	—	1.20	10.70	10.10	0.50	2.95	3.92	2.15	13.09	17.40	3.63	A	3.71	A
	12	24	—	—	—	3.76	6.94	—	—	—	1.20	10.70	11.50	0.50	2.95	3.92	2.15	13.09	17.40	3.63	A	3.72	A
	15	18	—	—	—	5.30	5.40	—	—	—	1.20	10.70	11.50	0.50	2.90	3.92	2.15	12.87	17.40	3.69	A	3.80	A
	18	18	—	—	—	5.35	5.35	—	—	—	1.20	10.70	11.50	0.50	2.89	3.92	2.15	12.83	17.40	3.70	A	3.80	A
	18	24	—	—	—	4.71	5.99	—	—	—	1.20	10.70	11.50	0.50	2.95	3.92	2.15	13.09	17.40	3.63	A	3.72	A
	24	24	—	—	—	5.35	5.35	—	—	—	1.20	10.70	11.50	0.50	2.95	3.92	2.44	13.09	17.40	3.63	A	3.89	A
1x3	7	7	12	—	—	2.30	2.30	3.80	—	—	1.50	8.40	11.50	0.55	2.33	3.92	2.50	10.34	17.40	3.61	A	3.88	A
	7	7	15	—	—	2.30	2.30	5.40	—	—	1.50	10.00	11.50	0.55	2.76	3.92	2.50	12.24	17.40	3.62	A	3.90	A
	7	7	18	—	—	2.30	2.30	5.50	—	—	1.50	10.10	11.50	0.55	2.79	3.92	2.50	12.36	17.40	3.63	A	3.90	A
	7	7	24	—	—	2.12	2.12	6.46	—	—	1.50	10.70	11.50	0.55	2.93	3.92	2.50	13.00	17.40	3.65	A	3.91	A
	7	9	9	—	—	2.30	2.90	2.90	—	—	1.50	8.10	11.50	0.55	2.24	3.92	2.50	9.94	17.40	3.62	A	3.91	A
	7	9	12	—	—	2.30	2.90	3.80	—	—	1.50	9.00	11.50	0.55	2.47	3.92	2.50	10.96	17.40	3.64	A	3.93	A
	7	9	15	—	—	2.30	2.90	5.40	—	—	1.50	10.60	11.50	0.55	2.93	3.92	2.50	13.00	17.40	3.62	A	3.92	A
	7	9	18	—	—	2.30	2.90	5.50	—	—	1.50	10.70	11.50	0.55	2.93	3.92	2.50	13.00	17.40	3.65	A	3.92	A
	7	9	24	—	—	2.02	2.54	6.14	—	—	1.50	10.70	11.50	0.55	2.93	3.92	2.50	13.00	17.40	3.65	A	3.90	A
	7	12	12	—	—	2.30	3.80	3.80	—	—	1.50	9.90	11.50	0.55	2.72	3.92	2.50	12.07	17.40	3.64	A	3.95	A
	7	12	15	—	—	2.12	3.60	4.98	—	—	1.50	10.70	11.50	0.55	2.94	3.92	2.50	13.04	17.40	3.64	A	3.90	A
	7	12	18	—	—	2.12	3.51	5.07	—	—	1.50	10.70	11.50	0.55	2.93	3.92	2.50	13.00	17.40	3.65	A	3.90	A
	7	12	24	—	—	1.88	3.10	5.72	—	—	1.50	10.70	11.50	0.55	2.93	3.92	2.50	13.00	17.40	3.65	A	3.92	A
	9	9	9	—	—	2.90	2.90	2.90	—	—	1.50	8.70	11.50	0.55	2.37	3.92	2.50	10.51	17.40	3.67	A	3.90	A
	9	9	12	—	—	2.90	2.90	3.80	—	—	1.50	9.60	11.50	0.55	2.60	3.92	2.50	11.54	17.40	3.69	A	3.93	A
	9	9	15	—	—	2.77	2.77	5.16	—	—	1.50	10.70	11.50	0.55	2.90	3.92	2.50	12.87	17.40	3.69	A	3.92	A
	9	9	18	—	—	2.75	2.75	5.21	—	—	1.50	10.70	11.50	0.55	2.90	3.92	2.50	12.87	17.40	3.69	A	3.92	A
	9	9	24	—	—	2.42	2.42	5.85	—	—	1.50	10.70	11.50	0.55	2.90	3.92	2.50	12.87	17.40	3.69	A	3.90	A
	9	12	12	—	—	2.90	3.80	3.80	—	—	1.50	10.50	11.50	0.55	2.85	3.92	2.50	12.64	17.40	3.68	A	3.95	A
	9	12	15	—	—	2.56	3.36	4.78	—	—	1.50	10.70	11.50	0.55	2.90	3.92	2.50	12.87	17.40	3.69	A	3.70	A
	9	12	18	—	—	2.54	3.33	4.82	—	—	1.50	10.70	11.50	0.55	2.90	3.92	2.50	12.87	17.40	3.69	A	3.70	A
	9	12	24	—	—	2.26	2.97	5.47	—	—	1.50	10.70	11.50	0.55	2.90	3.92	2.50	12.87	17.40	3.69	A	3.85	A

5U34HS1ERA

HEATING

Comb.	Combinations					Rated capacity(kW) (Nom.cooling)					Total cooling capacity(kW)			Total power input(kW)			Total current(A)@230V			EER(W/W)	ENERGY LABEL	SEER (W/W)	ENERGY LABEL
	UnitA	UnitB	UnitC	UnitD	UnitE	UnitA	UnitB	UnitC	UnitD	UnitE	Min.data	Rated data	Max.data	Min.data	Rated data	Max.data	Min.data	Rated data	Max.data	Rated capacity			
1x3	12	12	12	—	—	3.57	3.57	3.57	—	—	1.50	10.70	11.50	0.55	2.90	3.92	2.50	12.87	17.40	3.69	A	3.90	A
	12	12	15	—	—	3.13	3.13	4.44	—	—	1.50	10.70	11.50	0.55	2.90	3.92	2.50	12.87	17.40	3.69	A	3.95	A
	12	12	18	—	—	3.10	3.10	4.49	—	—	1.50	10.70	11.50	0.55	2.90	3.92	2.50	12.87	17.40	3.69	A	3.95	A
	12	12	24	—	—	2.78	2.78	5.13	—	—	1.80	10.70	11.50	0.55	2.90	3.92	2.50	12.87	17.40	3.69	A	3.95	A
	12	18	18	—	—	2.75	3.98	3.98	—	—	1.80	10.70	11.50	0.55	2.90	3.92	2.50	12.87	17.40	3.69	A	3.95	A
	18	18	18	—	—	3.57	3.57	3.57	—	—	1.80	10.70	11.50	0.55	2.90	3.92	2.50	12.87	17.40	3.69	A	3.98	A
1x4	7	7	7	7	—	2.30	2.30	2.30	2.30	—	1.80	9.20	11.50	0.55	2.47	3.92	2.50	10.96	17.40	3.72	A	3.90	A
	7	7	7	9	—	2.30	2.30	2.30	2.90	—	1.80	9.80	11.50	0.55	2.63	3.92	2.50	11.67	17.40	3.73	A	3.92	A
	7	7	7	12	—	2.30	2.30	2.30	3.80	—	1.80	10.70	11.50	0.55	2.87	3.92	2.50	12.73	17.40	3.73	A	3.94	A
	7	7	7	15	—	2.00	2.00	2.00	4.70	—	1.80	10.70	11.50	0.55	2.87	3.92	2.50	12.73	17.40	3.73	A	3.95	A
	7	7	7	18	—	1.98	1.98	1.98	4.75	—	1.80	10.70	11.50	0.55	2.87	3.92	2.50	12.73	17.40	3.73	A	3.95	A
	7	7	7	24	—	1.77	1.77	1.77	5.39	—	1.80	10.70	11.50	0.55	2.87	3.92	2.50	12.73	17.40	3.73	A	3.95	A
	7	7	9	9	—	2.30	2.30	2.90	2.90	—	1.80	10.40	11.50	0.55	2.80	3.92	2.50	12.42	17.40	3.71	A	3.97	A
	7	7	9	12	—	2.18	2.18	2.75	3.60	—	1.80	10.70	11.50	0.55	2.87	3.92	2.50	12.73	17.40	3.73	A	3.96	A
	7	7	9	15	—	1.91	1.91	2.41	4.48	—	1.80	10.70	11.50	0.55	2.87	3.92	2.50	12.73	17.40	3.73	A	4.00	A+
	7	7	9	18	—	1.89	1.89	2.39	4.53	—	1.80	10.70	11.50	0.55	2.87	3.92	2.50	12.73	17.40	3.73	A	4.00	A+
	7	7	9	24	—	1.70	1.70	2.14	5.17	—	1.80	10.70	11.50	0.55	2.87	3.92	2.50	12.73	17.40	3.73	A	4.00	A+
	7	7	12	12	—	2.02	2.02	3.33	3.33	—	1.80	10.70	11.50	0.55	2.68	3.92	2.50	11.87	17.40	4.00	A	4.00	A+
	7	7	12	15	—	1.80	1.80	3.15	3.96	—	1.80	10.70	11.50	0.55	2.68	3.92	2.50	11.87	17.40	4.00	A	4.00	A+
	7	7	12	18	—	1.77	1.77	2.93	4.23	—	1.80	10.70	11.50	0.55	2.68	3.92	2.50	11.87	17.40	4.00	A	4.00	A+
	7	9	9	9	—	2.24	2.82	2.82	2.82	—	1.80	10.70	11.50	0.55	2.68	3.92	2.50	11.87	17.40	4.00	A	4.00	A+
	7	9	9	12	—	2.07	2.61	2.61	3.42	—	1.80	10.70	11.50	0.55	2.68	3.92	2.50	11.87	17.40	4.00	A	4.00	A+
	7	9	9	15	—	1.75	2.54	2.54	3.86	—	1.80	10.70	11.50	0.55	2.68	3.92	2.50	11.87	17.40	4.00	A		
	7	9	9	18	—	1.81	2.28	2.28	4.33	—	1.80	10.70	11.50	0.55	2.68	3.92	2.50	11.87	17.40	4.00	A	4.00	A+
	7	9	12	12	—	1.92	2.42	3.18	3.18	—	1.80	10.70	11.50	0.55	2.67	3.92	2.50	11.85	17.40	4.01	A	4.00	A+
	7	12	12	12	—	1.80	2.97	2.97	2.97	—	1.80	10.70	11.50	0.55	2.68	3.92	2.50	11.87	17.40	4.00	A	4.00	A+
	9	9	9	9	—	2.68	2.68	2.68	2.68	—	1.80	10.70	11.50	0.55	2.68	3.92	2.50	11.87	17.40	4.00	A	4.00	A+
	9	9	9	12	—	2.48	2.48	2.48	3.25	—	1.80	10.70	11.50	0.55	2.68	3.92	2.50	11.87	17.40	4.00	A	4.00	A+
	9	9	9	15	—	2.20	2.20	2.20	4.10	—	1.80	10.70	11.50	0.55	2.68	3.92	2.50	11.87	17.40	4.00	A	4.00	A+
	9	9	9	18	—	2.19	2.19	2.19	4.14	—	1.80	10.70	11.50	0.55	2.68	3.92	2.50	11.87	17.40	4.00	A	4.00	A+
	9	9	12	12	—	2.32	2.32	3.03	3.03	—	1.80	10.70	11.50	0.55	2.68	3.92	2.50	11.87	17.40	4.00	A	4.00	A+
	9	12	12	12	—	2.17	2.84	2.84	2.84	—	1.80	10.70	11.50	0.55	2.68	3.92	2.50	11.87	17.40	4.00	A	4.00	A+
	12	12	12	12	—	2.68	2.68	2.68	2.68	—	1.80	10.70	11.50	0.55	2.68	3.92	2.50	11.87	17.40	4.00	A	4.00	A+
1×5	7	7	7	7	7	2.14	2.14	2.14	2.14	2.14	1.80	10.70	11.50	0.55	2.67	3.92	2.50	11.85	17.40	4.01	A	4.00	A+
	7	7	7	7	9	2.03	2.03	2.03	2.03	2.56	1.80	10.70	11.50	0.55	2.67	3.92	2.50	11.85	17.40	4.01	A	4.00	A+
	7	7	7	7	12	1.89	1.89	1.89	1.89	3.13	1.80	10.70	11.50	0.55	2.67	3.92	2.50	11.85	17.40	4.01	A	4.00	A+
	7	7	7	9	9	1.94	1.94	1.94	2.44	2.44	1.80	10.70	11.50	0.55	2.67	3.92	2.50	11.85	17.40	4.01	A	4.00	A+
	7	7	7	9	12	1.81	1.81	1.81	2.28	2.99	1.80	10.70	11.50	0.55	2.67	3.92	2.50	11.85	17.40	4.01	A	4.00	A+
	7	7	7	12	12	1.70	1.70	1.70	2.80	2.80	1.80	10.70	11.50	0.55	2.67	3.92	2.50	11.85	17.40	4.01	A	4.00	A+
	7	7	9	9	9	1.85	1.85	2.33	2.33	2.33	1.80	10.70	11.50	0.55	2.67	3.92	2.50	11.85	17.40	4.01	A	4.00	A+
	7	7	9	9	12	1.73	1.73	2.19	2.19	2.86	1.80	10.70	11.50	0.55	2.67	3.92	2.50	11.85	17.40	4.01	A	4.00	A+
	7	9	9	9	9	1.77	2.23	2.23	2.23	2.23	1.80	10.70	11.50	0.55	2.67	3.92	2.50	11.85	17.40	4.01	A	4.00	A+
	9	9	9	9	9	2.14	2.14	2.14	2.14	2.14	1.80	10.70	11.50	0.55	2.67	3.92	2.50	11.85	17.40	4.01	A	4.00	A+
	9	9	9	9	12	2.01	2.01	2.01	2.01	2.64	1.80	10.70	11.50	0.55	2.67	3.92	2.50	11.85	17.40	4.01	A	4.00	A+
	9	9	9	12	12	1.90	1.90	1.90	2.49	2.49	1.80	10.70	11.50	0.55	2.67	3.92	2.50	11.85	17.40	4.01	A	4.00	A+

MATCH TABLE

5U45LS1ERA

COOLING

Comb.	Combinations					Rated capacity(kW) (Nom.cooling)					Total cooling capacity(kW)			Total power input(kW)			Total current(A)@230V			EER(W/W)	ENERGY LABEL	SEER (W/W)	ENERGY LABEL
	UnitA	UnitB	UnitC	UnitD	UnitE	UnitA	UnitB	UnitC	UnitD	UnitE	Min.data	Rated data	Max.data	Min.data	Rated data	Max.data	Min.data	Rated data	Max.data	Rated capacity			
1x1	7	—	—	—	—	2.0	—	—	—	—	1.00	2.00	2.80	0.50	0.62	1.30	2.20	2.77	5.77	3.21	A	5.90	A+
	9	—	—	—	—	2.5	—	—	—	—	1.00	2.50	3.10	0.50	0.78	1.34	2.20	3.46	5.93	3.21	A	5.90	A+
	12	—	—	—	—	3.5	—	—	—	—	1.00	3.50	4.10	0.50	1.09	1.50	2.20	4.84	6.65	3.21	A	5.90	A+
	15	—	—	—		4.4	—	—	—		1.30	4.40	5.20	0.50	1.36	1.90	2.22	6.03	8.43	3.24	A	5.90	A+
	18	—	—	—	—	5.0	—	—	—	—	1.50	5.00	5.40	0.50	1.56	1.90	2.20	6.92	8.43	3.21	A	5.90	A+
	24	—	—	—	—	6.5	—	—	—	—	1.50	6.50	7.40	0.50	2.02	3.00	2.20	8.96	13.31	3.22	A	5.90	A+
1x2	7	18	—	—	—	2.00	5.00	—	—	—	1.00	7.00	8.20	0.50	2.18	3.61	2.15	9.67	16.02	3.21	A	6.20	A++
	7	24	—	—	—	2.00	6.50	—	—	—	1.00	8.50	10.20	0.50	2.65	4.21	2.15	11.76	18.69	3.21	A	6.20	A++
	9	15	—	—	—	2.00	4.40	—	—	—	1.00	6.40	8.50	0.50	1.95	3.50	2.15	8.65	15.53	3.28	A	6.20	A++
	9	18	—	—	—	2.50	5.00	—	—	—	1.00	7.50	8.50	0.50	2.32	3.65	2.15	10.29	16.19	3.23	A	6.20	A++
	9	24	—	—	—	2.50	6.50	—	—	—	1.00	9.00	10.50	0.50	2.70	4.25	2.15	11.98	18.86	3.33	A	6.20	A++
	12	15	—	—	—	3.50	4.40	—	—	—	1.00	7.90	9.50	0.50	2.43	3.50	2.15	10.78	15.53	3.25	A	6.20	A++
	12	18	—	—	—	3.50	5.00	—	—	—	1.00	8.50	9.50	0.50	2.65	3.65	2.15	11.76	16.19	3.21	A	6.20	A++
	12	24	—	—	—	3.50	6.50	—	—	—	1.00	10.00	11.50	0.50	3.10	4.25	2.15	13.75	18.86	3.23	A	6.20	A++
	18	18	—	—	—	5.00	5.00	—	—	—	1.00	10.00	10.80	0.50	3.10	4.00	2.15	13.75	17.75	3.23	A	6.20	A++
	18	24	—	—	—	5.00	7.10	—	—	—	1.00	12.10	12.80	0.50	3.77	4.60	2.15	16.72	20.41	3.21	A	6.20	A++
	24	24	—	—	—	6.10	6.10	—	—	—	1.00	12.20	13.50	0.50	3.80	5.20	2.15	16.86	23.07	3.21	A	6.20	A++
1x3	7	7	9	—	—	2.00	2.00	2.50	—	—	1.50	6.50	8.70	0.55	2.00	4.70	2.50	8.87	20.85	3.25	A	6.90	A++
	7	7	12	—	—	2.00	2.00	3.50	—	—	1.50	7.50	9.70	0.55	2.30	4.87	2.50	10.20	21.61	3.26	A	6.90	A++
	7	7	15	—	—	2.00	2.00	4.40			1.50	8.40	11.00	0.55	2.51	5.10	2.50	11.14	22.63	3.35	A	6.90	A++
	7	7	18	—	—	2.00	2.00	5.00	—	—	1.50	9.00	11.00	0.55	2.70	5.22	2.50	11.98	23.16	3.33	A	6.90	A++
	7	7	24	—	—	2.00	2.00	6.50	—	—	1.50	10.50	13.00	0.55	3.20	5.39	2.50	14.20	23.90	3.28	A	6.90	A++
	7	9	9	—	—	2.00	2.50	2.50	—	—	1.50	7.00	9.00	0.55	2.15	4.90	2.50	9.54	21.74	3.26	A	6.90	A++
	7	9	12	—	—	2.00	2.50	3.50	—	—	1.50	8.00	10.00	0.55	2.45	4.90	2.50	10.87	21.74	3.27	A	6.90	A++
	7	9	15	—	—	2.00	2.50	4.40	—	—	1.50	8.90	11.00	0.55	2.75	5.10	2.50	12.20	22.63	3.24	A	6.90	A++
	7	9	18	—	—	2.00	2.50	5.00	—	—	1.50	9.50	11.30	0.55	2.90	5.26	2.50	12.87	23.34	3.28	A	6.90	A++
	7	9	24	—	—	2.00	2.50	6.50	—	—	1.50	11.00	13.30	0.55	3.30	5.39	2.50	14.64	23.90	3.33	A	6.90	A++
	7	12	12	—	—	2.00	3.50	3.50	—	—	1.50	9.00	11.00	0.55	2.80	3.92	2.50	12.42	17.40	3.21	A	6.90	A++
	7	12	15	—	—	2.00	3.50	4.40	—	—	1.50	9.90	12.00	0.55	3.04	5.10	2.50	13.49	22.63	3.26	A	6.90	A++
	7	12	18	—	—	2.00	3.50	5.00	—	—	1.50	10.50	12.30	0.55	3.20	5.26	2.50	14.20	23.34	3.28	A	6.90	A++
	7	12	24	—	—	2.00	3.50	6.50	—	—	1.50	12.00	11.00	0.55	3.70	5.39	2.50	16.42	23.90	3.24	A	6.90	A++
	9	9	9	—	—	2.50	2.50	2.50	—	—	1.50	7.50	9.30	0.55	2.30	4.95	2.50	10.20	21.96	3.26	A	6.90	A++
	9	9	12	—	—	2.50	2.50	3.50	—	—	1.50	8.50	10.30	0.55	2.60	4.95	2.50	11.54	21.96	3.27	A	6.90	A++
	9	9	15	—	—	2.50	2.50	4.40	—	—	1.50	9.40	11.00	0.55	2.93	5.30	2.50	13.00	23.51	3.21	A	6.90	A++
	9	9	18	—	—	2.50	2.50	5.00	—	—	1.50	10.00	11.60	0.55	3.10	5.30	2.50	13.75	23.51	3.23	A	6.90	A++
	9	9	24	—	—	2.50	2.50	6.50	—	—	1.50	11.50	13.50	0.55	3.50	5.39	2.50	15.53	23.90	3.29	A	6.90	A++
	9	12	12	—	—	2.50	3.50	3.50	—	—	1.50	9.50	11.30	0.55	2.90	4.90	2.50	12.87	21.74	3.28	A	6.90	A++
	9	12	15	—	—	2.50	3.50	4.40	—	—	1.50	10.40	12.60	0.55	3.16	4.95	2.50	14.02	21.96	3.29	A	6.90	A++
	9	12	18	—	—	2.50	3.50	5.00	—	—	1.50	11.00	12.60	0.55	3.30	4.95	2.50	14.64	21.96	3.33	A	6.90	A++
	9	12	24	—	—	2.44	3.42	6.34	—	—	1.50	12.20	13.50	0.55	3.70	5.39	2.50	16.42	23.90	3.30	A	6.90	A++
	12	12	12	—	—	3.50	3.50	3.50	—	—	1.50	10.50	12.30	0.55	3.25	4.95	2.50	14.42	21.96	3.23	A	6.90	A++
	12	12	15	—	—	3.50	3.50	4.40	—	—	1.50	11.40	13.50	0.55	3.53	5.30	2.50	15.66	23.51	3.23	A	6.90	A++
	12	12	18	—	—	3.50	3.50	5.00	—	—	1.50	12.00	13.50	0.55	3.70	5.30	2.50	16.42	23.51	3.24	A	6.90	A++
	12	12	24	—	—	3.16	3.16	5.87	—	—	1.50	12.20	13.50	0.55	3.77	5.39	2.50	16.73	23.90	3.24	A	6.90	A++
	12	15	18	—	—	3.28	4.22	4.69	—	—	1.50	12.20	13.50	0.55	3.77	5.39	2.50	16.73	23.90	3.24	A	6.90	A++
	12	18	18	—	—	3.16	4.52	4.52	—	—	1.50	12.20	13.50	0.55	3.77	5.39	2.50	16.73	23.90	3.24	A	6.90	A++
	12	18	24	—	—	2.85	4.07	5.29	—	—	1.50	12.20	13.50	0.55	3.77	5.39	2.50	16.73	23.90	3.24	A	6.90	A++
	18	18	18	—	—	4.07	4.07	4.07	—	—	1.50	12.20	13.50	0.55	3.77	5.39	2.50	16.73	23.90	3.24	A	6.90	A++

5U45LS1ERA

COOLING

Comb.	Combinations					Rated capacity(kW) (Nom.cooling)					Total cooling capacity(kW)			Total power input(kW)			Total current(A)@230V			EER(W/W)	ENERGY LABEL	SEER (W/W)	ENERGY LABEL
	UnitA	UnitB	UnitC	UnitD	UnitE	UnitA	UnitB	UnitC	UnitD	UnitE	Min.data	Rated data	Max.data	Min.data	Rated data	Max.data	Min.data	Rated data	Max.data	Rated capacity			
1x4	7	7	7	7	—	2.00	2.00	2.00	2.00	—	1.80	8.00	11.20	0.55	2.45	5.39	2.50	10.87	23.90	3.27	A	6.92	A++
	7	7	7	9	—	2.00	2.00	2.00	2.50	—	1.80	8.50	11.50	0.55	2.60	5.39	2.50	11.54	23.90	3.27	A	6.92	A++
	7	7	7	12	—	2.00	2.00	2.00	3.50	—	1.80	9.50	12.50	0.55	2.90	5.39	2.50	12.87	23.90	3.28	A	6.92	A++
	7	7	7	15	—	2.00	2.00	2.00	4.40	—	1.80	10.40	13.50	0.55	3.15	5.39	2.50	13.98	23.90	3.30	A	6.92	A++
	7	7	7	18	—	2.00	2.00	2.00	5.00	—	1.80	11.00	13.50	0.55	3.30	5.39	2.50	14.64	23.90	3.33	A	6.92	A++
	7	7	7	24	—	1.95	1.95	1.95	6.34	—	1.80	12.20	13.50	0.55	3.65	5.39	2.50	16.19	23.90	3.34	A	6.92	A++
	7	7	9	9	—	2.00	2.00	2.50	2.50	—	1.80	9.00	11.80	0.55	2.70	5.39	2.50	11.98	23.90	3.33	A	6.92	A++
	7	7	9	12	—	2.00	2.00	2.50	3.50	—	1.80	10.00	12.80	0.55	3.01	5.39	2.50	13.35	23.90	3.32	A	6.92	A++
	7	7	9	15	—	2.00	2.00	2.50	4.40	—	1.80	10.90	13.50	0.55	3.30	5.39	2.50	14.64	23.90	3.30	A	6.92	A++
	7	7	9	18	—	2.00	2.00	2.50	5.00	—	1.80	11.50	13.50	0.55	3.45	5.39	2.50	15.31	23.90	3.33	A	6.92	A++
	7	7	9	24	—	1.88	1.88	2.35	6.10	—	1.80	12.20	13.50	0.55	3.65	5.39	2.50	16.19	23.90	3.34	A	6.92	A++
	7	7	12	12	—	2.00	2.00	3.50	3.50	—	1.80	11.00	13.50	0.55	3.30	5.39	2.50	14.64	23.90	3.33	A	6.92	A++
	7	7	12	15	—	2.05	2.05	3.59	4.51	—	1.80	12.20	13.50	0.55	3.65	5.39	2.50	16.19	23.90	3.34	A	7.00	A++
	7	7	12	18	—	1.95	1.95	3.42	4.88	—	1.80	12.20	13.50	0.55	3.65	5.39	2.50	16.19	23.90	3.34	A	7.00	A++
	7	7	12	24	—	1.74	1.74	3.05	5.66	—	1.80	12.20	13.50	0.55	3.65	5.39	2.50	16.19	23.90	3.34	A	7.00	A++
	7	9	9	12	—	2.32	2.90	2.90	4.07	—	1.80	12.20	13.10	0.55	3.65	5.39	2.50	16.19	23.90	3.34	A	7.00	A++
	7	9	9	15	—	2.14	2.68	2.68	4.71	—	1.80	12.20	13.50	0.55	3.65	5.39	2.50	16.19	23.90	3.34	A	7.00	A++
	7	9	9	18	—	2.03	2.54	2.54	5.08	—	1.80	12.20	13.50	0.55	3.65	5.39	2.50	16.19	23.90	3.34	A	7.00	A++
	7	9	9	24	—	1.81	2.26	2.26	5.87	—	1.80	12.20	13.50	0.55	3.65	5.39	2.50	16.19	23.90	3.34	A	7.00	A++
	7	9	12	12	—	2.00	2.50	3.50	3.50	—	1.80	11.50	13.50	0.55	3.50	5.39	2.50	15.53	23.90	3.29	A	7.00	A++
	7	12	12	12	—	1.95	3.42	3.42	3.42	—	1.80	12.20	13.50	0.55	3.60	5.39	2.50	15.97	23.90	3.39	A	7.00	A++
	9	9	9	9	—	2.50	2.50	2.50	2.50	—	1.80	10.00	12.40	0.55	3.01	5.39	2.50	13.35	23.90	3.32	A	7.00	A++
	9	9	9	12	—	2.50	2.50	2.50	3.50	—	1.80	11.00	13.40	0.55	3.30	5.39	2.50	14.64	23.90	3.33	A	7.00	A++
	9	9	9	15	—	2.56	2.56	2.56	4.51	—	1.80	12.20	13.50	0.55	3.65	5.39	2.50	16.19	23.90	3.34	A	7.00	A++
	9	9	9	18	—	2.44	2.44	2.44	4.88	—	1.80	12.20	13.50	0.55	3.65	5.39	2.50	16.19	23.90	3.34	A	7.00	A++
	9	9	9	24	—	2.18	2.18	2.18	5.66	—	1.80	12.20	13.50	0.55	3.65	5.39	2.50	16.19	23.90	3.34	A	7.00	A++
	9	9	12	12	—	2.54	2.54	3.56	3.56	—	1.80	12.20	13.50	0.55	3.64	5.39	2.50	16.15	23.90	3.35	A	7.00	A++
	9	9	12	15	—	2.36	2.36	3.31	4.16	—	1.80	12.20	13.50	0.55	3.63	5.39	2.50	16.11	23.90	3.36	A	7.00	A++
	9	9	12	18	—	2.26	2.26	3.16	4.52	—	1.80	12.20	13.50	0.55	3.63	5.39	2.50	16.11	23.90	3.36	A	7.00	A++
	9	12	12	12	—	2.35	3.28	3.28	3.28	—	1.80	12.20	13.50	0.55	3.63	5.39	2.50	16.11	23.90	3.36	A	7.00	A++
	12	12	12	12	—	3.05	3.05	3.05	3.05	—	1.80	12.20	13.50	0.55	3.63	5.39	2.50	16.11	23.90	3.36	A	7.00	A++
	9	12	12	15	—	2.19	3.07	3.07	3.86	—	1.80	12.20	13.50	0.55	3.63	5.39	2.50	16.11	23.90	3.36	A	7.00	A++
	9	12	12	18	—	2.10	2.94	2.94	4.21	—	1.80	12.20	13.50	0.55	3.63	5.39	2.50	16.11	23.90	3.36	A	7.00	A++
	9	12	12	24	—	1.91	2.67	2.67	4.96	—	1.80	12.20	13.50	0.55	3.63	5.39	2.50	16.11	23.90	3.36	A	7.00	A++
1x5	7	7	7	7	7	2.12	2.12	2.12	2.12	3.71	2.00	12.20	13.50	0.55	3.61	5.39	2.50	16.02	23.90	3.38	A	7.10	A++
	7	7	7	7	9	2.00	2.00	2.00	2.00	2.50	2.00	10.50	13.50	0.55	3.20	5.39	2.50	14.20	23.90	3.28	A	7.10	A++
	7	7	7	7	12	2.00	2.00	2.00	2.00	3.50	2.00	11.50	13.50	0.55	3.45	5.39	2.50	15.31	23.90	3.33	A	7.10	A++
	7	7	7	7	15	1.97	1.97	1.97	1.97	4.33	2.00	12.20	13.50	0.55	3.61	5.39	2.50	16.02	23.90	3.38	A	7.10	A++
	7	7	7	7	18	1.88	1.88	1.88	1.88	4.69	2.00	12.20	13.50	0.55	3.61	5.39	2.50	16.02	23.90	3.38	A	7.10	A++
	7	7	7	7	24	1.68	1.68	1.68	1.68	5.47	2.00	12.20	13.50	0.55	3.61	5.39	2.50	16.02	23.90	3.38	A	7.10	A++
	7	7	7	9	9	2.00	2.00	2.00	2.50	2.50	2.00	11.00	13.50	0.55	3.40	5.39	2.50	15.08	23.90	3.24	A	7.10	A++
	7	7	7	9	12	2.03	2.03	2.03	2.54	3.56	2.00	12.20	13.50	0.55	3.61	5.39	2.50	16.02	23.90	3.38	A	7.10	A++
	7	7	7	9	15	1.89	1.89	1.89	2.36	4.16	2.00	12.20	13.50	0.55	3.61	5.39	2.50	16.02	23.90	3.38	A	7.10	A++
	7	7	7	9	18	1.81	1.81	1.81	2.26	4.52	2.00	12.20	13.50	0.55	3.61	5.39	2.50	16.02	23.90	3.38	A	7.10	A++
	7	7	7	9	24	1.63	1.63	1.63	2.03	5.29	2.00	12.20	13.50	0.55	3.61	5.39	2.50	16.02	23.90	3.38	A	7.10	A++
	7	7	7	12	12	1.88	1.88	1.88	3.28	3.28	2.00	12.20	13.50	0.55	3.61	5.39	2.50	16.02	23.90	3.38	A	7.10	A++
	7	7	7	12	15	1.76	1.76	1.76	3.07	3.86	2.00	12.20	13.50	0.55	3.61	5.39	2.50	16.02	23.90	3.38	A	7.10	A++
	7	7	7	12	18	1.68	1.68	1.68	2.94	4.21	2.00	12.20	13.50	0.55	3.61	5.39	2.50	16.02	23.90	3.38	A	7.10	A++
	7	7	7	12	24	1.53	1.53	1.53	2.67	4.96	2.00	12.20	13.50	0.55	3.61	5.39	2.50	16.02	23.90	3.38	A	7.10	A++
	7	7	9	9	9	2.12	2.12	2.65	2.65	2.65	2.00	12.20	13.50	0.55	3.61	5.39	2.50	16.02	23.90	3.38	A	7.10	A++
	7	7	9	9	12	1.95	1.95	2.44	2.44	3.42	2.00	12.20	13.50	0.55	3.61	5.39	2.50	16.02	23.90	3.38	A	7.10	A++
	7	7	9	9	15	1.82	1.82	2.28	2.28	4.01	2.00	12.20	13.50	0.55	3.61	5.39	2.50	16.02	23.90	3.38	A	7.10	A++
	7	7	9	9	18	1.74	1.74	2.18	2.18	4.36	2.00	12.20	13.50	0.55	3.61	5.39	2.50	16.02	23.90	3.38	A	7.10	A++
	7	7	9	9	24	1.57	1.57	1.97	1.97	5.12	2.00	12.20	13.50	0.55	3.61	5.39	2.50	16.02	23.90	3.38	A	7.10	A++
	9	9	9	9	9	2.44	2.44	2.44	2.44	2.44	2.00	12.20	13.50	0.55	3.61	5.39	2.50	16.02	23.90	3.38	A	7.10	A++
	9	9	9	9	12	2.26	2.26	2.26	2.26	3.16	2.00	12.20	13.50	0.55	3.61	5.39	2.50	16.02	23.90	3.38	A	7.10	A++
	9	9	9	9	15	2.12	2.12	2.12	2.12	3.73	2.00	12.20	13.50	0.55	3.61	5.39	2.50	16.02	23.90	3.38	A	7.10	A++
	9	9	9	9	18	2.03	2.03	2.03	2.03	4.07	2.00	12.20	13.50	0.55	3.61	5.39	2.50	16.02	23.90	3.38	A	7.10	A++
	9	9	9	12	12	2.10	2.10	2.10	2.94	2.94	2.00	12.20	13.50	0.55	3.61	5.39	2.50	16.02	23.90	3.38	A	7.10	A++
	9	9	9	12	15	1.98	1.98	1.98	2.77	3.49	2.00	12.20	13.50	0.55	3.61	5.39	2.50	16.02	23.90	3.38	A	7.10	A++
	9	9	9	12	18	1.91	1.91	1.91	2.67	3.81	2.00	12.20	13.50	0.55	3.61	5.39	2.50	16.02	23.90	3.38	A	7.10	A++

MATCH TABLE

5U45LS1ERA

HEATING

Comb.	Combinations					Rated capacity(kW) (Nom.cooling)					Total cooling capacity(kW)			Total power input(kW)			Total current(A)@230V			EER(W/W)	ENERGY LABEL	SEER (W/W)	ENERGY LABEL
	UnitA	UnitB	UnitC	UnitD	UnitE	UnitA	UnitB	UnitC	UnitD	UnitE	Min.data	Rated data	Max.data	Min.data	Rated data	Max.data	Min.data	Rated data	Max.data	Rated capacity			
1x1	7	—	—	—	—	2.3	—	—	—	—	1.00	2.30	4.00	0.50	0.64	1.50	2.22	2.82	6.65	3.62	A	3.60	A
	9	—	—	—	—	2.9	—	—	—	—	1.00	2.90	4.10	0.50	0.80	1.40	2.22	3.55	6.21	3.63	A	3.60	A
	12	—	—	—	—	3.8	—	—	—	—	1.00	3.80	4.10	0.50	1.05	1.50	2.22	4.66	6.65	3.62	A	3.60	A
	15	—	—	—	—	5.4	—	—	—	—	1.30	5.40	6.00	0.47	1.48	1.90	2.09	6.57	8.43	3.65	A	3.60	A
	18	—	—	—	—	5.5	—	—	—	—	1.50	5.50	6.00	0.55	1.50	2.60	2.44	6.65	11.54	3.67	A	3.60	A
	24	—	—	—	—	7.0	—	—	—	—	1.50	7.00	8.60	0.55	1.90	2.60	2.44	8.43	11.54	3.68	A	3.60	A
1x2	7	18	—	—	—	2.30	5.50	—	—	—	1.20	7.80	10.00	0.55	2.16	3.55	2.15	9.58	15.75	3.61	A	3.6	A
	7	24	—	—	—	2.30	7.00	—	—	—	1.20	9.30	12.60	0.55	2.57	4.20	2.15	11.40	18.63	3.62	A	3.6	A
	9	15	—	—	—	2.90	5.40	—	—	—	1.20	8.30	10.10	0.50	2.27	3.50	2.15	10.07	15.53	3.66	A	3.60	A
	9	18	—	—	—	2.90	5.50	—	—	—	1.20	8.40	10.10	0.55	2.33	3.60	2.15	10.34	15.97	3.61	A	3.6	A
	9	24	—	—	—	2.90	7.00	—	—	—	1.20	9.90	12.70	0.55	2.74	4.20	2.15	12.16	18.63	3.61	A	3.6	A
	12	15	—	—	—	3.80	5.40	—	—	—	1.20	9.20	10.10	0.50	2.52	3.50	2.15	11.18	15.53	3.65	A	3.60	A
	12	18	—	—	—	3.80	5.50	—	—	—	1.20	9.30	10.10	0.55	2.57	3.60	2.15	11.40	15.97	3.62	A	3.6	A
	12	24	—	—	—	3.80	7.00	—	—	—	1.20	10.80	12.70	0.55	2.97	4.20	2.15	13.18	18.63	3.64	A	3.6	A
	18	18	—	—	—	5.50	5.50	—	—	—	1.20	11.00	12.00	0.55	3.04	4.00	2.15	13.49	17.75	3.62	A	3.6	A
	18	24	—	—	—	5.50	7.10	—	—	—	1.20	12.60	14.00	0.55	3.49	4.50	2.15	15.48	19.96	3.61	A	3.6	A
	24	24	—	—	—	6.34	6.34	—	—	—	1.20	12.68	14.00	0.55	3.50	5.10	2.15	15.53	22.63	3.62	A	3.6	A
1x3	7	7	9	—	—	2.30	2.30	2.90	—	—	1.50	7.50	12.10	0.55	2.08	4.80	2.50	9.23	21.30	3.61	A	3.70	A
	7	7	12	—	—	2.30	2.30	3.80	—	—	1.50	8.40	12.10	0.55	2.33	4.80	2.50	10.34	21.30	3.61	A	3.70	A
	7	7	15	—	—	2.30	2.30	5.40	—	—	1.50	10.00	11.50	0.55	2.77	5.10	2.50	12.29	22.63	3.61	A	3.70	A
	7	7	18	—	—	2.30	2.30	5.50	—	—	1.50	10.10	14.00	0.55	2.80	5.20	2.50	12.42	23.07	3.61	A	3.70	A
	7	7	24	—	—	2.30	2.30	7.00	—	—	1.50	11.60	14.00	0.55	3.20	5.39	2.50	14.20	23.90	3.63	A	3.70	A
	7	9	9	—	—	2.30	2.90	2.90	—	—	1.50	8.10	12.20	0.55	2.23	4.80	2.50	9.89	21.30	3.63	A	3.70	A
	7	9	12	—	—	2.30	2.90	3.80	—	—	1.50	9.00	12.20	0.55	2.48	4.80	2.50	11.00	21.30	3.63	A	3.70	A
	7	9	15	—	—	2.30	2.90	5.40	—	—	1.50	10.60	11.50	0.55	2.93	5.10	2.50	13.00	22.63	3.62	A	3.92	A
	7	9	18	—	—	2.30	2.90	5.50	—	—	1.50	10.70	14.00	0.55	2.94	5.23	2.50	13.04	23.20	3.64	A	3.70	A
	7	9	24	—	—	2.30	2.90	7.00	—	—	1.50	12.20	14.00	0.55	3.35	5.39	2.50	14.86	23.90	3.64	A	3.70	A
	7	12	12	—	—	2.30	3.80	3.80	—	—	1.50	9.90	11.50	0.55	2.74	5.30	2.50	12.16	23.51	3.61	A	3.70	A
	7	12	15	—	—	2.30	3.80	5.40	—	—	1.50	11.50	14.00	0.55	3.18	5.20	2.50	14.11	23.07	3.62	A	3.70	A
	7	12	18	—	—	2.30	3.80	5.50	—	—	1.50	11.60	14.00	0.55	3.20	5.20	2.50	14.20	23.07	3.63	A	3.70	A
	7	12	24	—	—	2.23	3.68	6.78	—	—	1.50	12.68	14.00	0.55	3.40	5.39	2.50	15.08	23.90	3.73	A	3.70	A
	9	9	9	—	—	2.90	2.90	2.90	—	—	1.50	8.70	12.30	0.55	2.40	4.90	2.50	10.65	21.74	3.63	A	3.70	A
	9	9	12	—	—	2.90	2.90	3.80	—	—	1.50	9.60	12.30	0.55	2.66	4.90	2.50	11.80	21.74	3.61	A	3.70	A
	9	9	15	—	—	2.90	2.90	5.40	—	—	1.50	11.20	14.00	0.55	3.10	5.20	2.50	13.75	23.07	3.61	A	3.70	A
	9	9	18	—	—	2.90	2.90	5.50	—	—	1.50	11.30	14.00	0.55	3.10	5.20	2.50	13.75	23.07	3.65	A	3.70	A
	9	9	24	—	—	2.90	2.90	7.00	—	—	1.50	12.80	14.00	0.55	3.45	5.39	2.50	15.31	23.90	3.71	A	3.70	A
	9	12	12	—	—	2.90	3.80	3.80	—	—	1.50	10.50	12.30	0.55	2.90	4.80	2.50	12.87	21.30	3.62	A	3.70	A
	9	12	15	—	—	2.90	3.80	5.40	—	—	1.50	12.10	14.00	0.55	3.33	4.90	2.50	14.77	21.74	3.63	A	3.70	A
	9	12	18	—	—	2.90	3.80	5.50	—	—	1.50	12.20	14.00	0.55	3.35	4.90	2.50	14.86	21.74	3.64	A	3.70	A
	9	12	24	—	—	2.68	3.52	6.48	—	—	1.50	12.68	14.00	0.55	3.40	5.39	2.50	15.08	23.90	3.73	A	3.70	A
	12	12	12	—	—	3.80	3.80	3.80	—	—	1.50	11.40	12.30	0.55	3.10	4.90	2.50	13.75	21.74	3.68	A	3.70	A
	12	12	15	—	—	3.71	3.71	5.27	—	—	1.50	12.68	14.00	0.55	3.43	5.20	2.50	15.22	23.07	3.70	A	3.70	A
	12	12	18	—	—	3.68	3.68	5.32	—	—	1.50	12.68	14.00	0.55	3.40	5.20	2.50	15.08	23.07	3.73	A	3.70	A
	12	12	24	—	—	3.30	3.30	6.08	—	—	1.50	12.68	14.00	0.55	3.40	5.39	2.50	15.08	23.90	3.73	A	3.70	A
	12	15	18	—	—	3.28	4.66	4.74	—	—	1.50	12.68	14.00	0.55	3.40	5.39	2.50	15.08	23.90	3.73	A	3.70	A
	12	18	18	—	—	3.26	4.71	4.71	—	—	1.50	12.68	14.00	0.55	3.40	5.39	2.50	15.08	23.90	3.73	A	3.70	A
	12	18	24	—	—	2.96	4.28	5.45	—	—	1.50	12.68	14.00	0.55	3.40	5.39	2.50	15.08	23.90	3.73	A	3.70	A
	18	18	18	—	—	4.23	4.23	4.23	—	—	1.50	12.68	14.00	0.55	3.40	5.39	2.50	15.08	23.90	3.73	A	3.70	A

5U45LS1ERA

HEATING

Comb.	Combinations					Rated capacity(kW) (Nom.cooling)					Total cooling capacity(kW)			Total power input(kW)			Total current(A)@230V			EER(W/W)	ENERGY LABEL	SEER (W/W)	ENERGY LABEL
	UnitA	UnitB	UnitC	UnitD	UnitE	UnitA	UnitB	UnitC	UnitD	UnitE	Min.data	Rated data	Max.data	Min.data	Rated data	Max.data	Min.data	Rated data	Max.data	Rated capacity			
1x4	7	7	7	7	—	2.30	2.30	2.30	2.30	—	1.80	9.20	14.00	0.55	2.50	5.39	2.50	11.09	23.90	3.68	A	3.80	A
	7	7	7	9	—	2.30	2.30	2.30	2.90	—	1.80	9.80	14.00	0.55	2.70	5.39	2.50	11.98	23.90	3.63	A	3.80	A
	7	7	7	12	—	2.30	2.30	2.30	3.80	—	1.80	10.70	14.00	0.55	2.90	5.39	2.50	12.87	23.90	3.69	A	3.80	A
	7	7	7	15	—	2.30	2.30	2.30	5.40	—	1.80	12.30	14.00	0.55	3.30	5.39	2.50	14.64	23.90	3.73	A	3.80	A
	7	7	7	18	—	2.30	2.30	2.30	5.50	—	1.80	12.40	14.00	0.55	3.30	5.39	2.50	14.64	23.90	3.76	A	3.80	A
	7	7	7	24	—	2.10	2.10	2.10	6.39	—	1.80	12.68	14.00	0.55	3.30	5.39	2.50	14.64	23.90	3.84	A	3.80	A
	7	7	9	9	—	2.30	2.30	2.90	2.90	—	1.80	10.40	14.00	0.55	2.85	5.39	2.50	12.64	23.90	3.65	A	3.80	A
	7	7	9	12	—	2.30	2.30	2.90	3.80	—	1.80	11.30	14.00	0.55	3.10	5.39	2.50	13.75	23.90	3.65	A	3.80	A
	7	7	9	15	—	2.26	2.26	2.85	5.31	—	1.80	12.68	14.00	0.55	3.30	5.39	2.50	14.64	23.90	3.84	A	3.80	A
	7	7	9	18	—	2.24	2.24	2.83	5.36	—	1.80	12.68	14.00	0.55	3.30	5.39	2.50	14.64	23.90	3.84	A	3.80	A
	7	7	9	24	—	2.01	2.01	2.54	6.12	—	1.80	12.68	14.00	0.55	3.30	5.39	2.50	14.64	23.90	3.84	A	3.80	A
	7	7	12	12	—	2.30	2.30	3.80	3.80	—	1.80	12.20	14.00	0.55	3.30	5.39	2.50	14.64	23.90	3.70	A	3.80	A
	7	7	12	15	—	2.11	2.11	3.49	4.96	—	1.80	12.68	14.00	0.55	3.30	5.39	2.50	14.64	23.90	3.84	A	3.80	A
	7	7	12	18	—	2.10	2.10	3.47	5.02	—	1.80	12.68	14.00	0.55	3.30	5.39	2.50	14.64	23.90	3.84	A	3.80	A
	7	7	12	24	—	1.89	1.89	3.13	5.76	—	1.80	12.68	14.00	0.55	3.30	5.39	2.50	14.64	23.90	3.84	A	3.80	A
	7	9	9	12	—	2.30	2.9	2.9	3.80	—	1.80	11.90	14.00	0.55	3.30	5.39	2.50	14.64	23.90	3.61	A	3.80	A
	7	9	9	15	—	2.16	2.72	2.72	5.07	—	1.80	12.68	14.00	0.55	3.30	5.39	2.50	14.64	23.90	3.84	A	3.80	A
	7	9	9	18	—	2.14	2.70	2.70	5.13	—	1.80	12.68	14.00	0.55	3.30	5.39	2.50	14.64	23.90	3.84	A	3.80	A
	7	9	9	24	—	1.93	2.44	2.44	5.88	—	1.80	12.68	14.00	0.55	3.30	5.39	2.50	14.64	23.90	3.84	A	3.80	A
	7	9	12	12	—	2.28	2.87	3.76	3.76	—	1.80	12.68	14.00	0.55	3.30	5.39	2.50	14.64	23.90	3.84	A	3.80	A
	7	12	12	12	—	2.13	3.52	3.52	3.52	—	1.80	12.68	14.00	0.55	3.30	5.39	2.50	14.64	23.90	3.84	A	3.80	A
	9	9	9	9	—	2.90	2.90	2.90	2.90	—	1.80	11.60	14.00	0.55	3.10	5.39	2.50	13.75	23.90	3.74	A	3.80	A
	9	9	9	12	—	2.90	2.90	2.90	3.80	—	1.80	12.50	14.00	0.55	3.30	5.39	2.50	14.64	23.90	3.79	A	3.80	A
	9	9	9	15	—	2.61	2.61	2.61	4.86	—	1.80	12.68	14.00	0.55	3.30	5.39	2.50	14.64	23.90	3.84	A	3.80	A
	9	9	9	18	—	2.59	2.59	2.59	4.91	—	1.80	12.68	14.00	0.55	3.30	5.39	2.50	14.64	23.90	3.84	A	3.80	A
	9	9	9	24	—	2.34	2.34	2.34	5.65	—	1.80	12.68	14.00	0.55	3.25	5.39	2.50	14.42	23.90	3.90	A	3.80	A
	9	9	12	12	—	2.74	2.74	3.60	3.60	—	1.80	12.68	14.00	0.55	3.25	5.39	2.50	14.42	23.90	3.90	A	3.80	A
	9	9	12	15	—	2.45	2.45	3.21	4.56	—	1.80	12.68	14.00	0.55	3.25	5.39	2.50	14.42	23.90	3.90	A	3.80	A
	9	9	12	18	—	2.44	2.44	3.19	4.62	—	1.80	12.68	14.00	0.55	3.25	5.39	2.50	14.42	23.90	3.90	A	3.80	A
	9	12	12	12	—	2.57	3.37	3.37	3.37	—	1.80	12.68	14.00	0.55	3.25	5.39	2.50	14.42	23.90	3.90	A	3.80	A
	12	12	12	12	—	3.17	3.17	3.17	3.17	—	1.80	12.68	14.00	0.55	3.25	5.39	2.50	14.42	23.90	3.90	A	3.80	A
	9	12	12	15	—	2.31	3.03	3.03	4.31	—	1.80	12.68	14.00	0.55	3.25	5.39	2.50	14.42	23.90	3.90	A	3.80	A
	9	12	12	18	—	2.30	3.01	3.01	4.36	—	1.80	12.68	14.00	0.55	3.25	5.39	2.50	14.42	23.90	3.90	A	3.80	A
	9	12	12	24	—	2.10	2.75	2.75	5.07	—	1.80	12.68	14.00	0.55	3.24	5.39	2.50	14.37	23.90	3.91	A	3.80	A
1x5	7	7	7	7	7	2.30	2.30	2.30	2.30	2.30	1.80	11.50	14.00	0.55	3.10	5.39	2.50	13.75	23.90	3.71	A	3.85	A
	7	7	7	7	9	2.30	2.30	2.30	2.30	2.90	1.80	12.10	14.00	0.55	3.24	5.39	2.50	14.37	23.90	3.73	A	3.85	A
	7	7	7	7	12	2.24	2.24	2.24	2.24	3.71	1.80	12.68	14.00	0.55	3.24	5.39	2.50	14.37	23.90	3.91	A	3.85	A
	7	7	7	7	15	2.00	2.00	2.00	2.00	4.69	1.80	12.68	14.00	0.55	3.24	5.39	2.50	14.37	23.90	3.91	A	3.85	A
	7	7	7	7	18	1.98	1.98	1.98	1.98	4.74	1.80	12.68	14.00	0.55	3.24	5.39	2.50	14.37	23.90	3.91	A	3.85	A
	7	7	7	7	24	1.80	1.80	1.80	1.80	5.48	1.80	12.68	14.00	0.55	3.24	5.39	2.50	14.37	23.90	3.91	A	3.85	A
	7	7	7	9	9	2.30	2.30	2.30	2.90	2.90	1.80	12.68	14.00	0.55	3.24	5.39	2.50	14.37	23.90	3.91	A	3.85	A
	7	7	7	9	12	2.14	2.14	2.14	2.70	3.54	1.80	12.68	14.00	0.55	3.24	5.39	2.50	14.37	23.90	3.91	A	3.85	A
	7	7	7	9	15	1.92	1.92	1.92	2.42	4.50	1.80	12.68	14.00	0.55	3.24	5.39	2.50	14.37	23.90	3.91	A	3.85	A
	7	7	7	9	18	1.91	1.91	1.91	2.40	4.56	1.80	12.68	14.00	0.55	3.24	5.39	2.50	14.37	23.90	3.91	A	3.85	A
	7	7	7	9	24	1.74	1.74	1.74	2.19	5.28	1.80	12.68	14.00	0.55	3.24	5.39	2.50	14.37	23.90	3.91	A	3.85	A
	7	7	7	12	12	2.01	2.01	2.01	3.32	3.32	1.80	12.68	14.00	0.55	3.24	5.39	2.50	14.37	23.90	3.91	A	3.85	A
	7	7	7	12	15	1.81	1.81	1.81	2.99	4.25	1.80	12.68	14.00	0.55	3.24	5.39	2.50	14.37	23.90	3.91	A	3.85	A
	7	7	7	12	18	1.80	1.80	1.80	2.97	4.30	1.80	12.68	14.00	0.55	3.24	5.39	2.50	14.37	23.90	3.91	A	3.85	A
	7	7	7	12	24	1.65	1.65	1.65	2.72	5.01	1.80	12.68	14.00	0.55	3.24	5.39	2.50	14.37	23.90	3.91	A	3.85	A
	7	7	9	9	9	2.19	2.19	2.76	2.76	2.76	1.80	12.68	14.00	0.55	3.24	5.39	2.50	14.37	23.90	3.91	A	3.85	A
	7	7	9	9	12	2.05	2.05	2.59	2.59	3.39	1.80	12.68	14.00	0.55	3.24	5.39	2.50	14.37	23.90	3.91	A	3.85	A
	7	7	9	9	15	1.85	1.85	2.33	2.33	4.33	1.80	12.68	14.00	0.55	3.24	5.39	2.50	14.37	23.90	3.91	A	3.85	A
	7	7	9	9	18	1.83	1.83	2.31	2.31	4.39	1.80	12.68	14.00	0.55	3.24	5.39	2.50	14.37	23.90	3.91	A	3.85	A
	7	7	9	9	24	1.68	1.68	2.11	2.11	5.10	1.80	12.68	14.00	0.55	3.24	5.39	2.50	14.37	23.90	3.91	A	3.85	A
	9	9	9	9	9	2.54	2.54	2.54	2.54	2.54	1.80	12.68	14.00	0.55	3.24	5.39	2.50	14.37	23.90	3.91	A	3.85	A
	9	9	9	9	12	2.39	2.39	2.39	2.39	3.13	1.80	12.68	14.00	0.55	3.24	5.39	2.50	14.37	23.90	3.91	A	3.85	A
	9	9	9	9	15	2.16	2.16	2.16	2.16	4.03	1.80	12.68	14.00	0.55	3.24	5.39	2.50	14.37	23.90	3.91	A	3.85	A
	9	9	9	9	18	2.15	2.15	2.15	2.15	4.08	1.80	12.68	14.00	0.55	3.24	5.39	2.50	14.37	23.90	3.91	A	3.85	A
	9	9	9	12	12	2.26	2.26	2.26	2.96	2.96	1.80	12.68	14.00	0.55	3.24	5.39	2.50	14.37	23.90	3.91	A	3.85	A
	9	9	9	12	15	2.05	2.05	2.05	2.69	3.83	1.80	12.68	14.00	0.55	3.24	5.39	2.50	14.37	23.90	3.91	A	3.85	A
	9	9	9	12	18	2.04	2.04	2.04	2.68	3.87	1.80	12.68	14.00	0.55	3.24	5.39	2.50	14.37	23.90	3.91	A	3.85	A

SUPER MATCH
ON/OFF

| 119 Models Line-up
| 121 Benefits
| 123 KEY FEATURE
| 125 Cassette Type
| 126 Convertible Type
| 127 Medium ESP Duct
| 128 High ESP Duct
| 130 Cabinet Type

MODEL LINE-UP

Super Match ON/OFF

Btu/h	kW	Universal outdoor unit	-25 °C low ambient cooling outdoor unit	Cassette type		Convertible type	Medium ESP duct type 100Pa	High ESP duct type 150Pa	Cabinet type
48000	12.5	1U48LS1EAB(S)	1U48LS2EAB(S) NEW	AB48ES1ERA(S)		AC48FS1ERA(S)	AD48NS1ERA(S)	AD48HS1ERA(S)	AP48DS1ERA(S) AP48KS1ERA(S)
60000	14.0/16.0	1U60IS2EAB(S) 1U60IS1EAB(S)	1U60IS3EAB(S) NEW	AB60ES2ERA(S) AB60CS1ERA(S)		AC60FS1ERA(S)		AD60HS1ERA(S)	AP60KS1ERA(S)
84000	25.0	AU84NATEAA						AD842AHEAA	

BENEFITS

SuperMatch

SERIES	MODEL	ENERGY SAVING				SMART							HEALTH		COMFORT												
		180° sine wave DC inverter	DC motor	Energy class A++	Sleep mode	Wi-Fi control	Group controller	Central control	BMS	On-Off card	Move eye intelligent system	Fresh air channel		Premium filter	Evaporator self-cleaning	Super quiet	Quiet operation	Low noise	Left & Right airflow	Far distance air supplying	360°airflow	4-way airflow	3D auto airflow	Wide-angle airflow	4 way independent airflow	Auto mode	Auto-swing	DRY function
Cassette type	AB48ES1ERA(S)				√	√	√	√	√	√		√		√	√		√					√				√	√	√
	AB60ES2ERA(S)				√	√	√	√	√	√		√		√	√		√					√				√	√	√
Convertible type	AC48FS1ERA(S)				√	√	√	√	√	√		√		√	√		√		√				√	√		√	√	√
	AC60FS1ERA(S)				√	√	√	√	√	√		√		√	√		√		√				√	√		√	√	√
Medium ESP duct type	AD48NS1ERA(S)				√	√	√	√	√	√				√	√		√									√	√	√
High ESP duct type	AD48HS1ERA(S)				√	√	√	√	√	√				√	√		√			√						√	√	√
	AD60HS1ERA(S)				√	√	√	√	√	√				√	√		√			√						√	√	√
	AD842AHEAA				√		√	√	√	√				√	√		√			√						√	√	√
Cabinet type	AP48DS1ERA(S)				√	√	√	√	√	√				√	√		√		√	√			√			√	√	√
	AP48KS1ERA(S)				√	√	√	√	√	√				√	√		√		√	√			√			√	√	√
	AP60KS1ERA(S)				√	√	√	√	√	√				√	√		√		√	√			√			√	√	√

SERIES	MODEL	CONVENIENCE										CONVENIENCE							RELIABILITY					
		Super match	Weekly timer	24 hours timer	Auto restart	Smart defrosting	Child lock	Double 8 display	4 fan settings	Adjustable E.S.P		Two-way drain	Drain water pump	Branch outlet	Quick installation	Compact design	Built-in valve	Widely electricity Hz	-15°C heating	-20°C heating	-10°C cooling	-15°C cooling	Self-diagnosis function	3 minutes protection
Cassette type	AB48ES1ERA(S)	√	√	√	√	√	√							√				√					√	√
	AB60ES2ERA(S)	√	√	√	√	√	√							√				√					√	√
Convertible type	AC48FS1ERA(S)	√	√	√	√	√	√											√					√	√
	AC60FS1ERA(S)	√	√	√	√	√	√											√					√	√
Medium ESP duct type	AD48NS1ERA(S)	√	√	√	√	√	√					√						√					√	√
High ESP duct type	AD48HS1ERA(S)	√	√	√	√	√	√											√					√	√
	AD60HS1ERA(S)	√	√	√	√	√	√											√					√	√
	AD842AHEAA		√	√	√	√	√											√					√	√
Cabinet type	AP48DS1ERA(S)	√	√	√	√	√	√	√										√					√	√
	AP48KS1ERA(S)	√	√	√	√	√	√	√										√					√	√
	AP60KS1ERA(S)	√	√	√	√	√	√	√										√					√	√

√ : Standard √ : Optional

KEY FEATURE

Low Ambient Cooling Solution

Fan speed controller

Because the ON OFF unit we use AC fan motor which only have 1-3 speeds , for working with lower speed for fan motor in low ambient , we add the fan speed controller which can regulate the operation speed of fan motor according to the pipe temperature.

Fan speed controller programme

The fan speed controller will change the fan speed according to the coil temperature for stable operation ,

The fan speed controller send different voltage signals to adjust the fan speed , which is from stop , different fan speed to full speed ;

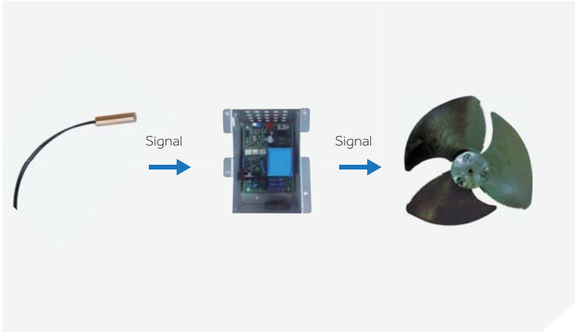

-25 degree low ambient cooling solution

Work in rotation function

We have accessory YCJ-A002 , this accessory have rotation function which is perfect for low ambient cooling requirement;

Two sets unit can work in rotation , the rotation choice is 8/10/12/24 hours , 12 hours as default . This function avoid working long time for single unit , increase the life time for the units , even when one unit is in malfunction , the other unit will continue to work until the maintenance staff arrives ;

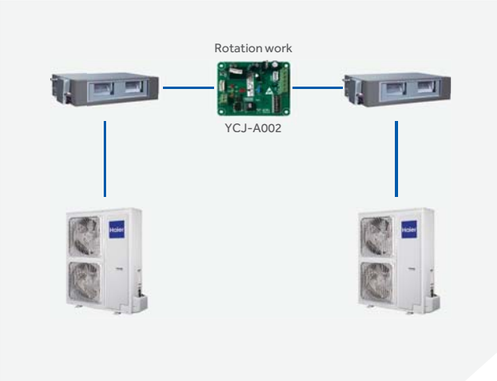

Wifi control

We have wifi control function , we can use the wifi to remote control the unit , even the malfunction happens , the malfunction signal can be sent to the mobile phone for quick maintenance ;

CASSETTE TYPE

48,60K

60K

AB48ES1ERA(S) **AB60ES2ERA(S)**

AB60CS1ERA(S)

YR-HD

60K

48K

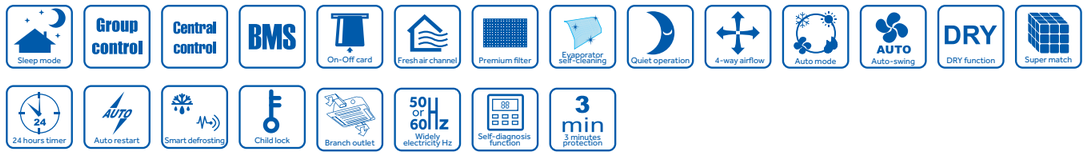

Model	Indoor unit			AB48ES1ERA(S)	AB60ES2ERA(S)	AB60CS1ERA(S)
	Outoor unit			1U48LS1EAB(S)	1U60IS2EAB(S)	1U60IS1EAB(S)
	low ambient cooling outdoor unit			1U48LS2EAB(S)	/	1U60IS3EAB(S)
Nominal performance data	Capacity	Nominal cooling	Btu/h	44350	48100	51500
			kW	13	14.1	15.1
		Nominal heating	Btu/h	48100	52900	55600
			kW	14.1	15.5	16.3
	Rated power input	Cooling	kW	4.62	4.66	5.02
		Heating	kW	4.85	4.82	5.08
	EER/COP			2.81/2.91	3.03/3.22	3.01/3.21
	Energy class(Cooling/Heating)			/	/	/
Indoor Unit						
Electrical parameters	Power supply		Ph/V/Hz	1/220~230/50/60	1/220~230/50/60	1/220~230/50/60
Performance	Air flow(H/M/L)		m^3/h	1650/1400/1300	1650/1400/1300	1980/1750/1500
	Sound pressure level(H/M/L)		dB(A)	49/47/44	49/47/44	50/45/42
Installation	External dimensions(W/D/H)		mm	840/840/290	840/840/290	1230/840/280
	Shipping dimensions(W/D/H)		mm	930/930/390	930/930/390	1325/920/370
	Net/Shipping weight		kg	31/37	31/37	46/53
	Controller		Standard	YR-HD	YR-HD	YR-HD
			Option	Please refer to control system in page 131		
Panel	Model			PB-950JB	PB-950JB	PB-1340IB
	External dimensions(W/D/H)		mm	950/950/60	950/950/60	1340/950/80
	Shipping dimensions(W/D/H)		mm	985/985/115	985/985/115	1400/995/115
	Net/Shipping weight		kg	6/7.5	6/7.5	8.4/12
Outdoor Unit						
Electrical parameters	Power supply		Ph/V/Hz	3/380~400/50	3/380~400/50	3/380~400/50
Performance	Air flow (H)		m^3/h	4200	6500	6500
	Sound pressure level		dB(A)	60	60	60
Installation	External dimensions(W/D/H)		mm	1008/410/830	960/340/1250	960/340/1250
	Shipping dimensions(W/D/H)		mm	1130/490/930	1095/410/1400	1095/410/1400
	Net/Shipping weight		kg	90/105	108/118	108/118
	Compressor type			SCROOL	SCROOL	SCROOL
	Refrigerant type			R410A	R410A	R410A
	Refrigerant liquid pipe		mm	9.52	9.52	9.52
	Refrigerant gas pipe		mm	19.05	19.05	19.05
	Max pipe length		m	50	50	50
	Max drop between I.U.&O.U		m	30	30	30
Working temp.	Cooling	Normal (Min~Max)	℃	10~46	10~46	10~46
		Adopting fan speed controllerl (Min~Max)	℃	-25~46	/	-25~46
	Heating(Min~Max)		℃	-7~24	-7~24	-7~24

* Data is pending;

CONVERTIBLE TYPE

AC48FS1ERA(S) **AC60FS1ERA(S)**

48K

60K

YR-HD

48,60K

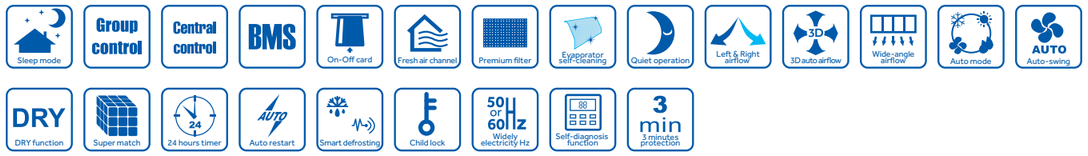

Model	Indoor unit			AC48FS1ERA(S)	AC60FS1ERA(S)	AC60FS1ERA(S)
	Outoor unit			1U48LS1EAB(S)	1U60IS2EAB(S)	1U60IS1EAB(S)
	low ambient cooling outdoor unit			1U48LS2EAB(S)	/	1U60IS3EAB(S)
Nominal performance data	Capacity	Nominal cooling	Btu/h	48100	49500	53200
			kW	14.1	14.5	15.5
		Nominal heating	Btu/h	51850	52850	57330
			kW	15.2	15.5	16.8
	Rated power input	Cooling	kW	4.67	4.50	5.13
		Heating	kW	4.71	4.28	5.23
	EER/COP			3.02/3.23	3.22/3.62	3.02/3.21
	Energy class(Cooling/Heating)			/	/	/
Indoor Unit						
Electrical parameters	Power supply		Ph/V/Hz	1/220~230/50/60	1/220~230/50/60	1/220~230/50/60
Performance	Air flow(H/M/L)		m^3/h	2000/1800/1400	2000/1800/1400	2000/1800/1400
	Sound pressure level(H/M/L)		dB(A)	53/51/49	53/51/49	53/51/49
Installation	External dimensions(W/D/H)		mm	1580/700/240	1580/700/240	1580/700/240
	Shipping dimensions(W/D/H)		mm	1710/790/315	1710/790/315	1710/790/315
	Net/Shipping weight		kg	54/61	54/61	54/61
	Controller		Standard	YR-HD	YR-HD	YR-HD
			Option	Please refer to control system in page 131		
Outdoor Unit						
Electrical parameters	Power supply		Ph/V/Hz	3/380~400/50	3/380~400/50	3/380~400/50
Performance	Air flow (H)		m^3/h	4200	6500	7000
	Sound pressure level		dB(A)	60	58	58
Installation	External dimensions(W/D/H)		mm	1008/447/830	960/340/1250	960/340/1250
	Shipping dimensions(W/D/H)		mm	1130/490/930	1095/410/1400	1095/410/1400
	Net/Shipping weight		kg	95/105	108/118	108/118
	Compressor type			Rotary	SCROOL	SCROOL
	Refrigerant type			R410A	R410A	R410A
	Refrigerant liquid pipe		mm	9.52	9.52	9.52
	Refrigerant gas pipe		mm	19.05	19.05	19.05
	Max pipe length		m	50	50	50
	Max drop between I.U.&O.U		m	30	30	30
Working temp.	Cooling	Normal (Min~Max)	℃	10~46	10~46	10~46
		Adopting fan speed controllerl (Min~Max)	℃	-25~46	/	-25~46
	Heating(Min~Max)		℃	-7~24	-7~24	-7~24

* Data is pending;

MEDIUM ESP DUCT

AD48NS1ERA(S)

48K

YR-E17

48K

Model	Indoor unit			AD48NS1ERA(S)
	Outoor unit			1U48LS1EAB(S)
	low ambient cooling outdoor unit			1U48LS2EAB(S)
Nominal performance data	Capacity	Nominal cooling	Btu/h	46000
			kW	13.5
		Nominal heating	Btu/h	49100
			kW	14.4
	Rated power input	Cooling	kW	4.47
		Heating	kW	4.45
	EER/COP			3.02/3.24
	Energy class(Cooling/Heating)			/
Indoor Unit				
Electrical parameters	Power supply		Ph/V/Hz	1/220~230/50/60
Performance	Air flow(H/M/L)		m^3/h	2090/1970/1792
	External static pressure		Pa	50/100
	Sound pressure level(H/M/L)		dB(A)	49/47/43
Installation	External dimensions(W/D/H)		mm	1135/742/270
	Shipping dimensions(W/D/H)		mm	1300/850/380
	Net/Shipping weight		kg	52/55
	Controller		Standard	YR-E17
			Option	Please refer to control system in page 131
Outdoor Unit				
Electrical parameters	Power supply		Ph/V/Hz	3/380~400/50
Performance	Air flow (H)		m^3/h	4200
	Sound pressure level		dB(A)	59
Installation	External dimensions(W/D/H)		mm	1008/447/830
	Shipping dimensions(W/D/H)		mm	1130/490/930
	Net/Shipping weight		kg	95/105
	Compressor type			SCROOL
	Refrigerant type			R410A
	Refrigerant liquid pipe		mm	9.52
	Refrigerant gas pipe		mm	19.05
	Max pipe length		m	50
	Max drop between I.U.&O.U		m	30
Working temp.	Cooling	Normal (Min~Max)	°C	10~46
		Adopting fan speed controllerl (Min~Max)	°C	-25~46
	Heating(Min~Max)		°C	-7~24

* Data is pending;

HIGH ESP DUCT

AD48HS1ERA(S) **AD60HS1ERA(S)**

48K

60K

YR-E17

48K,60K

Model	Indoor unit			AD48HS1ERA(S)	AD60HS1ERA(S)	AD60HS1ERA(S)
	Outoor unit			1U48LS1EAB(S)	1U60IS2EAB(S)	1U60IS1EAB(S)
	low ambient cooling outdoor unit			1U48LS2EAB(S)	/	1U60IS3EAB(S)
Nominal performance data	Capacity	Nominal cooling	Btu/h	46000	48100	54600
			kW	13.5	14.1	16
		Nominal heating	Btu/h	49100	52850	58700
			kW	15	15.5	17.2
	Rated power input	Cooling	kW	4.8	4.62	5.30
		Heating	kW	4.40	4.27	4.76
	EER/COP			2.81/3.41	3.05/3.63	3.02/3.61
	Energy class(Cooling/Heating)			/	/	/
Indoor Unit						
Electrical parameters	Power supply		Ph/V/Hz	1/220~230/50/60	1/220~230/50/60	1/220~230/50/60
Performance	Air flow(H/M/L)		m^3/h	2580/2070/1560	2580/2070/1560	2580/2070/1560
	External static pressure		Pa	50~150	50~150	50~150
	Sound pressure level(H/M/L)		dB(A)	50/46/42	50/46/42	50/46/42
Installation	External dimensions(W/D/H)		mm	1197/830/360	1197/830/360	1197/830/360
	Shipping dimensions(W/D/H)		mm	1430/940/420	1430/940/420	1430/940/420
	Net/Shipping weight		kg	57/70	57/70	70/77
	Controller		Standard	YR-E17	YR-E17	YR-E17
			Option	Please refer to control system in page 131		
Outdoor Unit						
Electrical parameters	Power supply		Ph/V/Hz	3/380~400/50	3/380~400/50	3/380~400/50
Performance	Air flow (H)		m^3/h	4200	4200	6500
	Sound pressure level		dB(A)	58	59	59
Installation	External dimensions(W/D/H)		mm	960/340/1250	960/340/1250	960/340/1250
	Shipping dimensions(W/D/H)		mm	1095/410/1400	1095/410/1400	1095/410/1400
	Net/Shipping weight		kg	108/118	108/118	108/118
	Compressor type			SCROOL	Scroll	Scroll
	Refrigerant type			R410A	R410A	R410A
	Refrigerant liquid pipe		mm	9.52	9.52	9.52
	Refrigerant gas pipe		mm	19.05	19.05	19.05
	Max pipe length		m	50	50	50
	Max drop between I.U.&O.U		m	30	30	30
Working temp.	Cooling	Normal (Min~Max)	°C	10~46	10~46	10~46
		Adopting fan speed controllerl (Min~Max)	°C	-25~46	/	-25~46
	Heating(Min~Max)		°C	-7~24	-7~24	-7~24

* Data is pending;

HIGH ESP DUCT

AD842AHEAA

84K

YR-E17

84K

Sleep mode | Group control | Central control | BMS | On-Off card | Premium filter | Evaporator self-cleaning | Quiet operation | Far distance air supplying | Auto mode | AUTO Auto-swing | DRY DRY function | 24 hours timer | Auto restart

Smart defrosting | Child lock | 50 or 60 Hz Widely electricity Hz | Self-diagnosis function | 3 min 3 minutes protection

Model	Indoor unit			AD842AHEAA
	Outoor unit			AU84NATEAA
	low ambient cooling outdoor unit			/
Nominal performance data	Capacity	Nominal cooling	Btu/h	81900
			kW	24
		Nominal heating	Btu/h	85300
			kW	25
	Rated power input	Cooling	kW	7.41
		Heating	kW	6.79
	EER/COP			3.24/3.68
	Energy class(Cooling/Heating)			/
Indoor Unit				
Electrical parameters	Power supply		Ph/V/Hz	1/220~230/50
Performance	Air flow(H/M/L)		m^3/h	4000/3000/2000
	External static pressure		Pa	130
	Sound pressure level(H/M/L)		dB(A)	60/-
Installation	External dimensions(W/D/H)		mm	1570/880/360
	Shipping dimensions(W/D/H)		mm	1800/1000/525
	Net/Shipping weight		kg	92/100
	Controller		Standard	YR-E17
			Option	Please refer to control system in page 131
Outdoor Unit				
Electrical parameters	Power supply		Ph/V/Hz	3/380~400/50
Performance	Air flow (H)		m^3/h	11000/-
	Sound pressure level		dB(A)	64
Installation	External dimensions(W/D/H)		mm	990/750/1750
	Shipping dimensions(W/D/H)		mm	1160/940/1950
	Net/Shipping weight		kg	161/185
	Compressor type			Scroll
	Refrigerant type			R410A
	Refrigerant liquid pipe		mm	12.7
	Refrigerant gas pipe		mm	25.4
	Max pipe length		m	50
	Max drop between I.U.&O.U		m	30
Working temp.	Cooling	Normal (Min~Max)	°C	10~46
		Adopting fan speed controllerl (Min~Max)	°C	/
	Heating(Min~Max)		°C	-7~24

CABINET TYPE

AP48DS1ERA(S) **AP48KS1ERA(S)**

AP60KS1ERA(S)

48K

60K

YR-HD

48K 48,60K

Sleep mode | Group control | Central control | BMS | On-Off card | Premium filter | Evaporator self-cleaning | Quiet operation | Left & Right airflow | Far distance air supplying | 3D auto airflow | Auto mode | AUTO Auto-swing | DRY DRY function

Super match | 24 hours timer | Auto restart | Smart defrosting | Child lock | Double 8 display | 50 or 60 Hz Widely electricity Hz | Self-diagnosis function | 3 min 3 minutes protection

Model	Indoor unit			AP48DS1ERA(S)	AP48KS1ERA(S)	AP60KS1ERA(S)	AP60KS1ERA(S)
	Outoor unit			1U48LS1EAB(S)	1U48LS1EAB(S)	1U60IS2EAB(S)	1U60IS1EAB(S)
	low ambient cooling outdoor unit			1U48L2EAB(S)	1U48L2EAB(S)	/	1U60IS3EAB(S)
Nominal performance data	Capacity	Nominal cooling	Btu/h	48100	48100	49500	52850
			kW	14.1	14.1	14.5	15.5
		Nominal heating	Btu/h	51500	51500	53250	55600
			kW	15.1	15.1	15.6	16.3
	Rated power input	Cooling	kW	4.80	4.80	4.50	5.14
		Heating	kW	5.00	5.00	4.57	5.07
	EER/COP			2.94/3.02	2.94/3.02	3.22/3.41	3.01/3.21
	Energy class(Cooling/Heating)			/	/	/	/
Indoor Unit							
Electrical parameters	Power supply		Ph/V/Hz	1/220~230/50	1/220~230/50	1/220~230/50	1/220~230/50
Performance	Air flow(H/M/L)		m^3/h	1750/1500/1350	1750/1500/1350	1750/1500/1350	1750/1500/1350
	Sound pressure level(H/M/L)		dB(A)	48/44/40	51/48/44	51/48/44	51/48/44
Installation	External dimensions(W/D/H)		mm	1824/529/380	1850/600/350	1850/600/350	1850/600/350
	Shipping dimensions(W/D/H)		mm	1965/625/465	1980/660/420	1980/660/420	1980/660/420
	Net/Shipping weight		kg	55/62	57/65	57/65	57/65
	Controller		Standard	YR-HD	YR-HD	YR-HD	YR-HD
			Option	Please refer to control system in page 131			
Outdoor Unit							
Electrical parameters	Power supply		Ph/V/Hz	3/380~400/50	3/380~400/50	3/380~400/50	3/380~400/50
Performance	Air flow (H)		m^3/h	4200	4200	6500	7000
	Sound pressure level		dB(A)	58	58	58	59
Installation	External dimensions(W/D/H)		mm	1008/447/830	1008/447/830	960/340/1250	960/340/1250
	Shipping dimensions(W/D/H)		mm	1130/490/930	1130/490/930	1095/410/1400	1095/410/1400
	Net/Shipping weight		kg	95/105	95/105	108/118	108/118
	Compressor type			Scroll	SCROOL	SCROOL	SCROOL
	Refrigerant type			R410A	R410A	R410A	R410A
	Refrigerant liquid pipe		mm	9.52	9.52	9.52	9.52
	Refrigerant gas pipe		mm	19.05	19.05	19.05	19.05
	Max pipe length		m	50	50	50	50
	Max drop between I.U.&O.U		m	30	30	30	30
Working temp.	Cooling	Normal (Min~Max)	°C	10~46	10~46	10~46	10~46
		Adopting fan speed controllerl (Min~Max)	°C	-25~46	-25~46	/	-25~46
	Heating(Min~Max)		°C	-7~24	-7~24	-7~24	-7~24

* Data is pending;

CONTROL SYSTEM

Controller	Design	Model	Functions	For what units
Infrared controller		YR-HD	*Single unit operation *Cool, heat, dry, quiet, separated button *Clock *Timer	Super match (except high wall unit)
		YR-HBS01	*On/Off, Mode, Fan speed, Temperature setting, Swing Individual control *Indoor Temp. & Humidity display *Four grades of fan speed *Individual blade control for super match II cassette (HAB***H1ERG/HAB***I1ERG) *Follow/Evade function"	Nebula Smart power Cassette Duct type
Wired controller		YR-E16A	*Single unit control *Group control, max.16 units *Weekly timer *Clock *Temperature, fan speed, fan direction	All (except console unit)
		YR-E16B		
		YR-E17	*86x86mm,same size with the switch; thickness only13.05mm, super slim *Touch screen, back up light *Easy installation, user friendly	All (except console unit)
Wifi		KZW-W001	*Internet remote wifi control *Weekly timer	All (except high wall, console unit)
Central conroller		YCZ-G001	*Central control max. 32 indoor units (MRV+Super Match mixed control) *Weekly timer	All (except directly connection to console unit)
		YCZ-A003	*Central control, max.128 indoor units (MRV+Super Match mixed control) *Weekly timer *Zone control	All (except directly connection to console unit)
		YCZ-A004	*Individual control, Group control & Central control (Max 256 indoor units) *7-inch TFT LCD touch screen with back light *Indoor units' information edit *Power distribution and report *Historical data backup	All (except directly connection to console unit)
BMS		HCM-05A	*MRV&Super Match system mixed control *Max500 indoor units(MRV&Super Match), including 128 super match indoor units max *Internet control *Bacnet IP, modbus IP, modbus RTU protocol converter *Power consumption report	All (except directly connection to console unit)
Wireless control receiver		RE-02	*Realize infrared control for duct type	Duct
Converter		YCJ-A002	*Change super match communication protocol to 485 communication protocol for central control， BMS control * Realize wifi control for super match indoor units * Realize working in turn function for use in base station	All (except directly connection to console unit)
Error detection module		YCJ-A003	*Half-duplex communication with the indoor unit. Using the "Haier commercial air conditioning RMON protocol" to communicate with up to 128 indoor units *Real-time detection for malfunction ,digital display for units' error code and address number *Passive contact output for some particular malfunction *Two buttons with ON OFF control can do some simple control for the indoor unit	All (except directly connection to high wall unit,console unit)

DIMENSIONS

129 Outdoor Platform

135 Indoor Platform

OUTDOOR PLATFORM

Smart Power

1UH071N1ERG/1UH090N1ERG/1UH105N1ERG

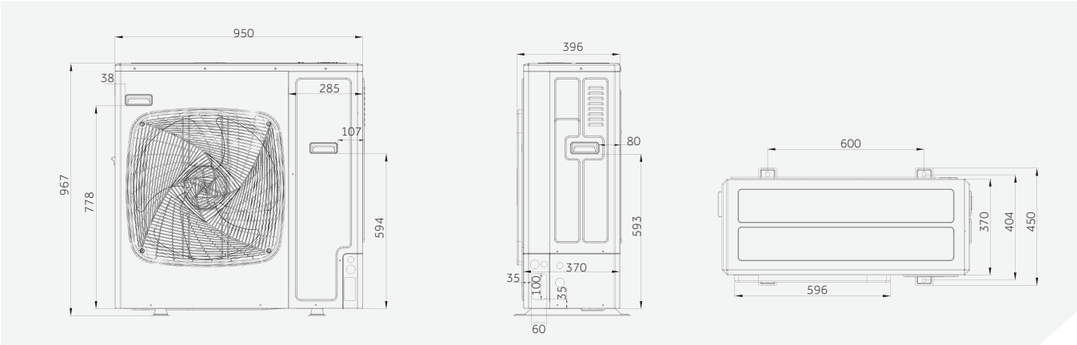

1UH125P1ERK/1UH140P1ERK

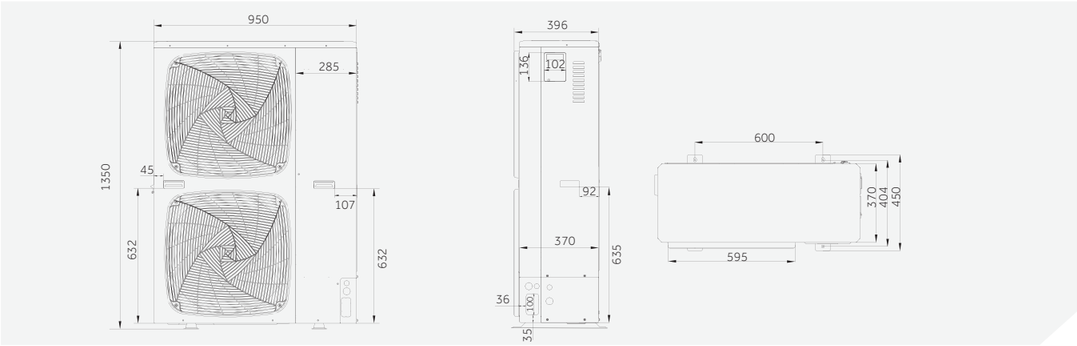

Classic Power

1U12BS3ERA

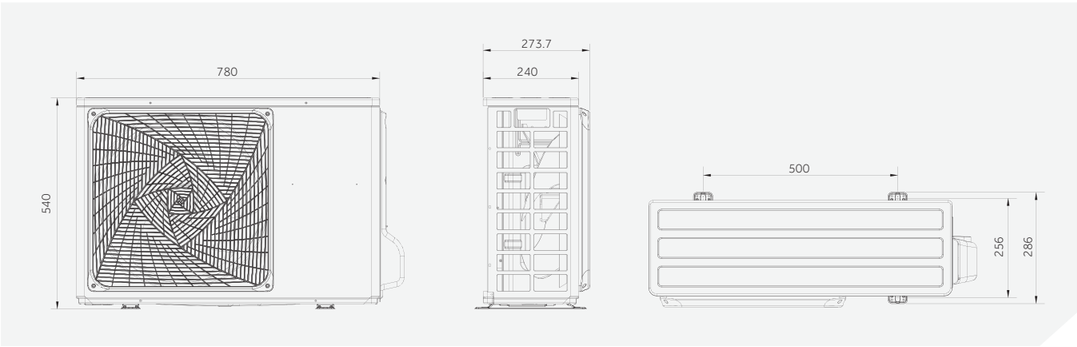

Classic Power

1U18FS2ERA(S)

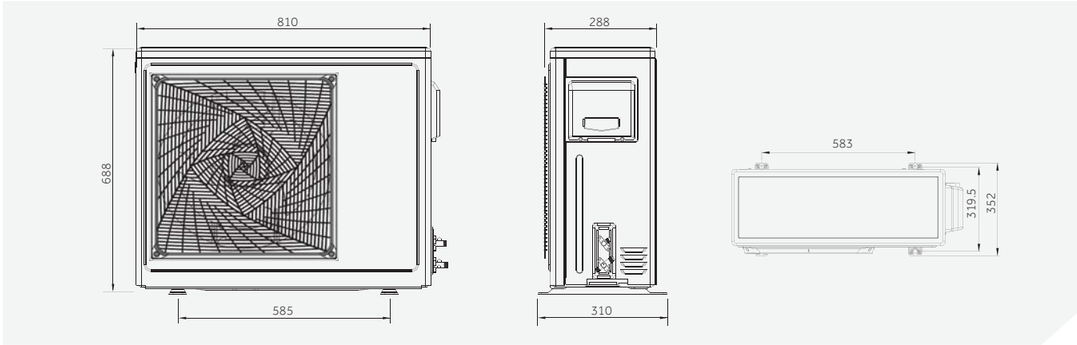

1U24GS1ERA

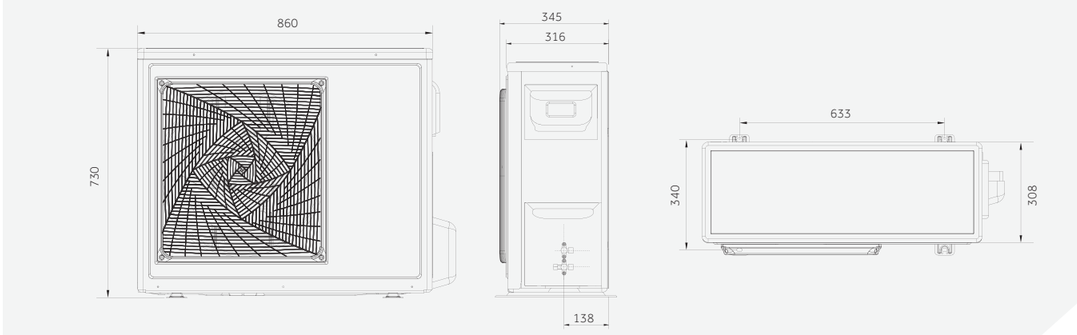

1U28GS2ERA(S)

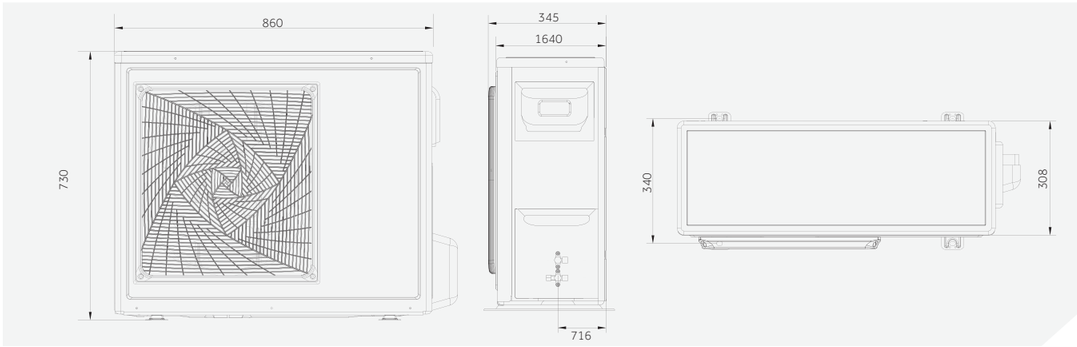

OUTDOOR PLATFORM

Classic Power

1U36HS1ERA(S)

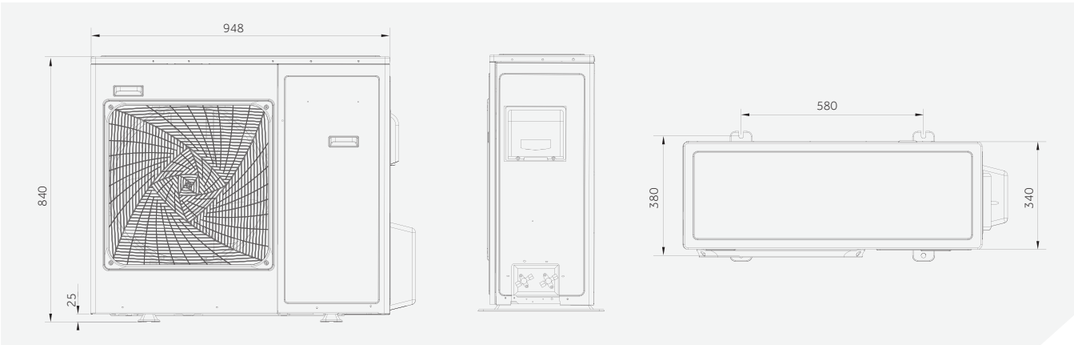

Classic Power
ON/OFF

1U48LS1ERA(S)/1U48LS1ERB(S)

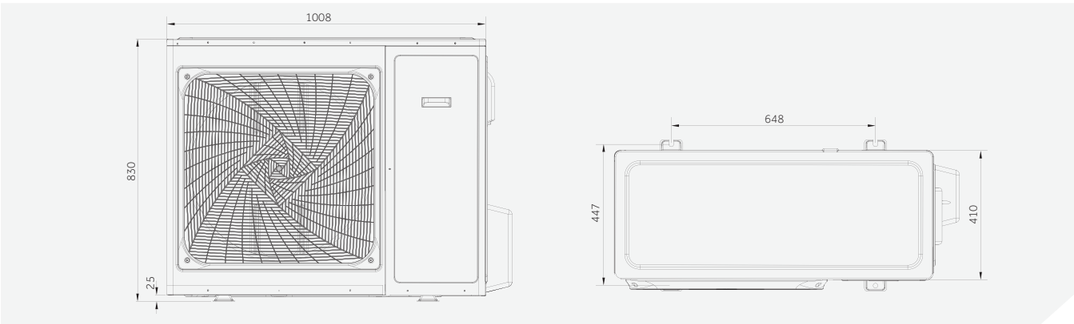

1U60IS2ERB(S)

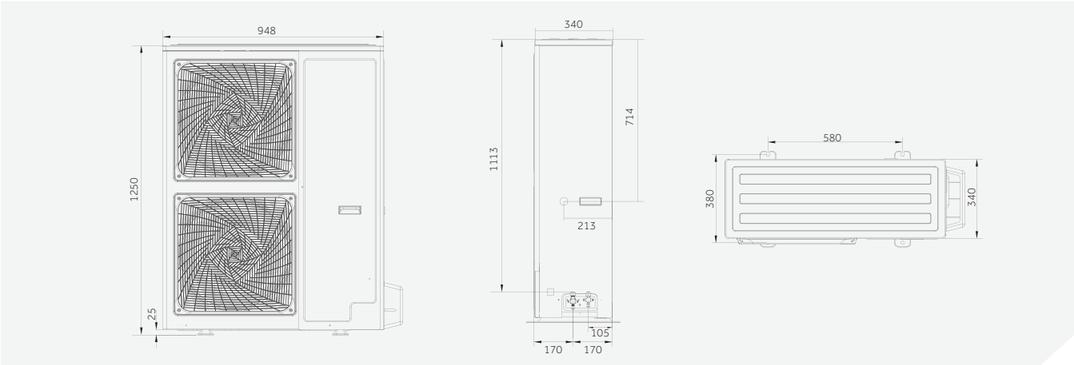

ON/OFF

AU84NATEAA

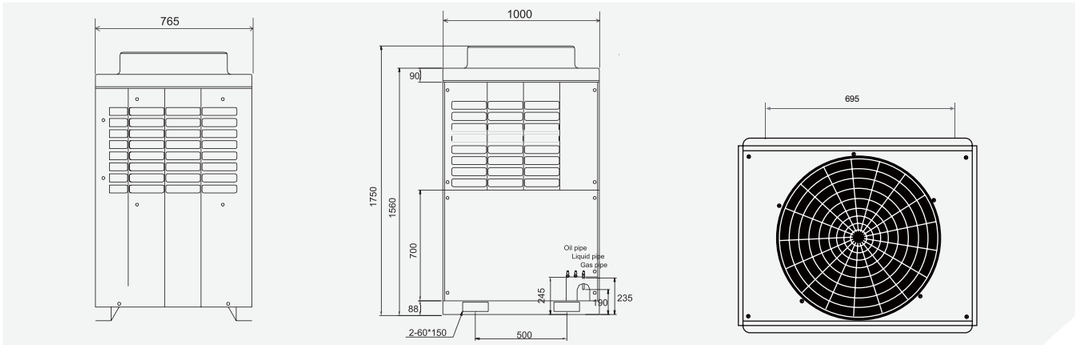

Multi Split

2U14CS2ERA(S)

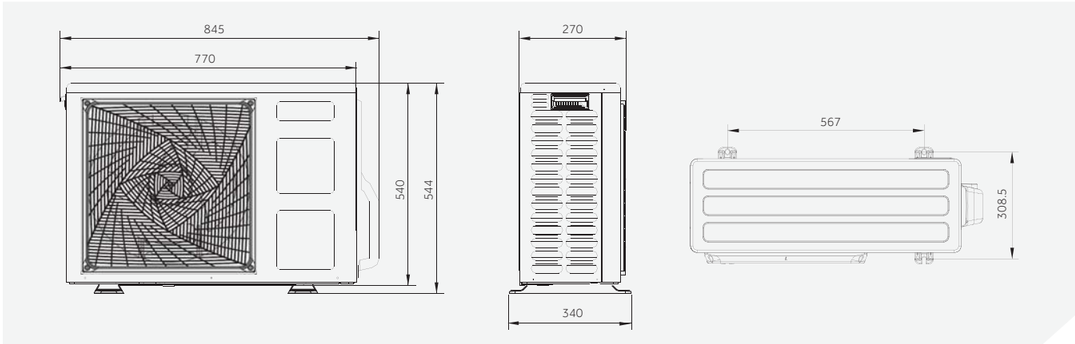

2U18FS2ERA(S)

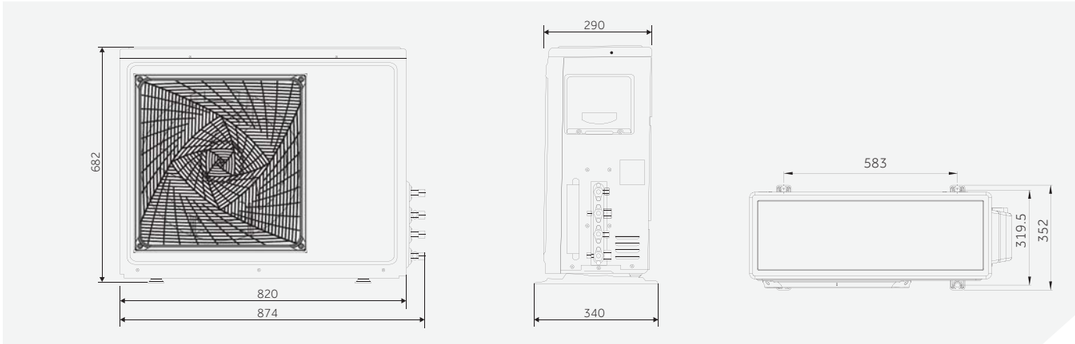

OUTDOOR PLATFORM

Multi Split

3U19FS1ERA(N)

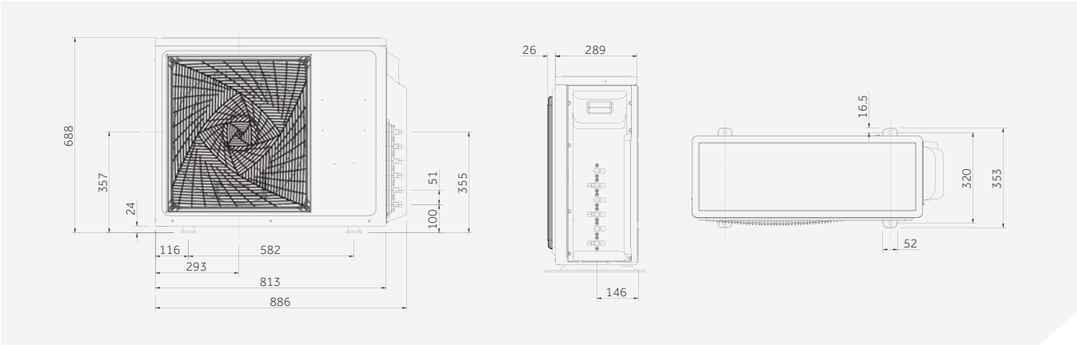

3U24GS1ERA(N)

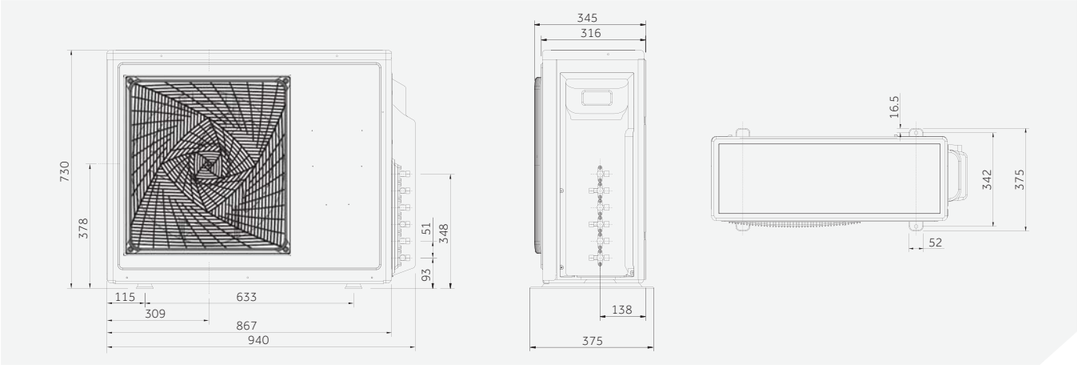

4U26HS1ERA/4U30HS1ERA/5U34HS1ERA

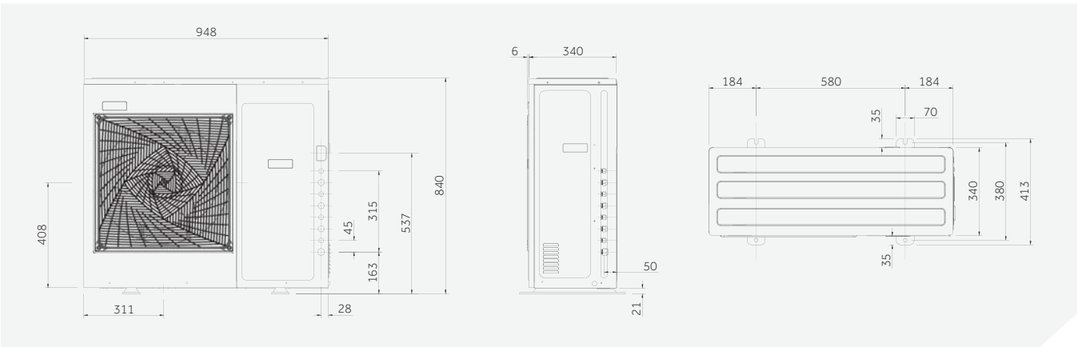

Multi Split

5U45LS1ERA

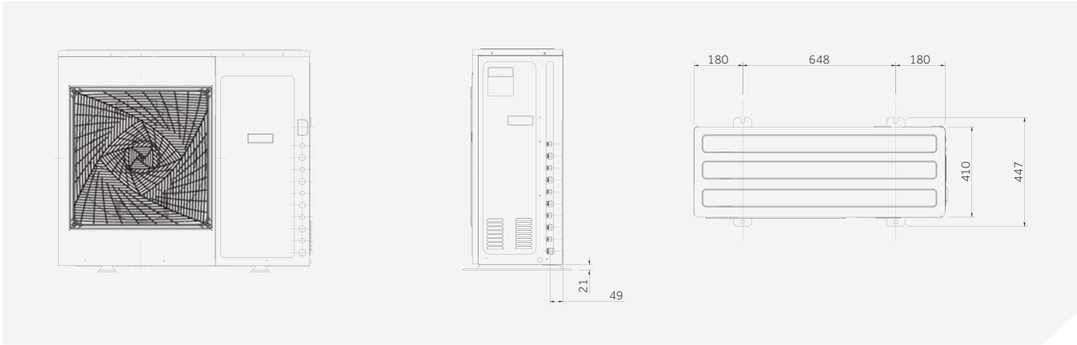

INDOOR PLATFORM

Cassette Type (360°Smart airflow)

ABH071H1ERG/ABH090H1ERG/ABH105H1ERG

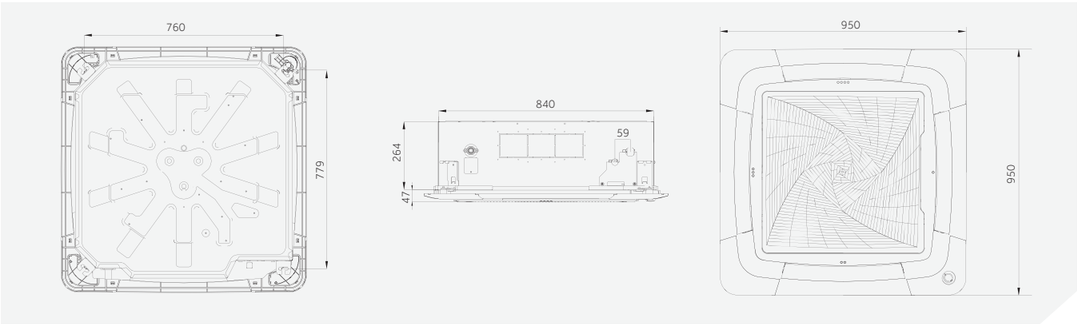

ABH125K1ERG/ABH140K1ERG

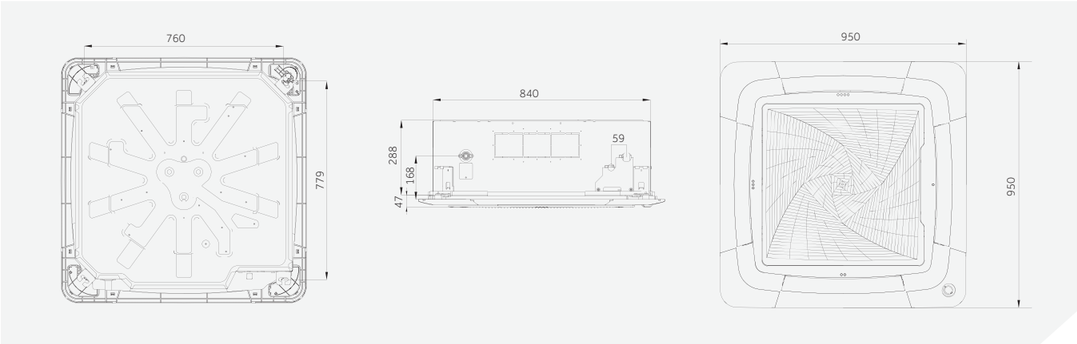

Cassette Type

AB09CS2ERA(S)/AB12CS2ERA(S)/AB18CS2ERA(S)

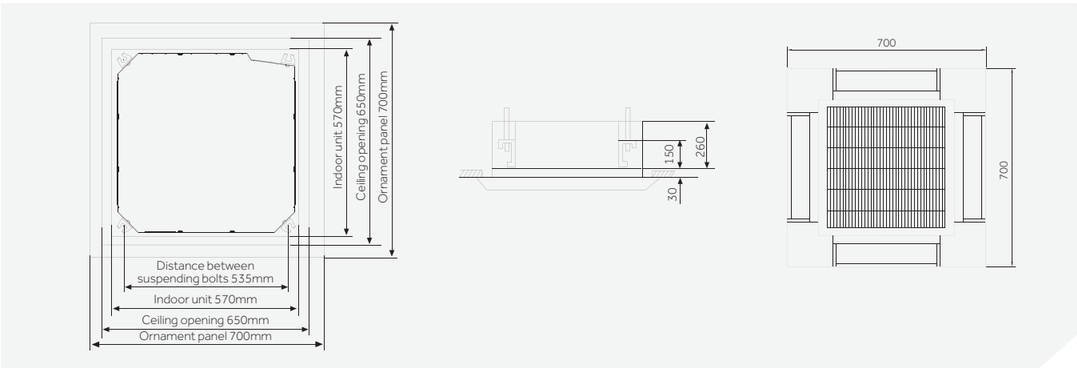

Cassette Type

AB24ES1ERA(S)/AB28ES1ERA(S)

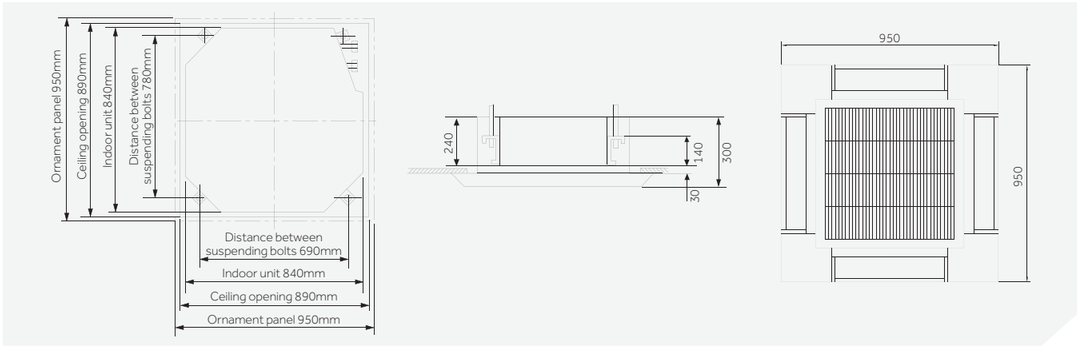

AB36ES1ERA(S)/AB48ES1ERA(S)/AB60ES2ERA(S)

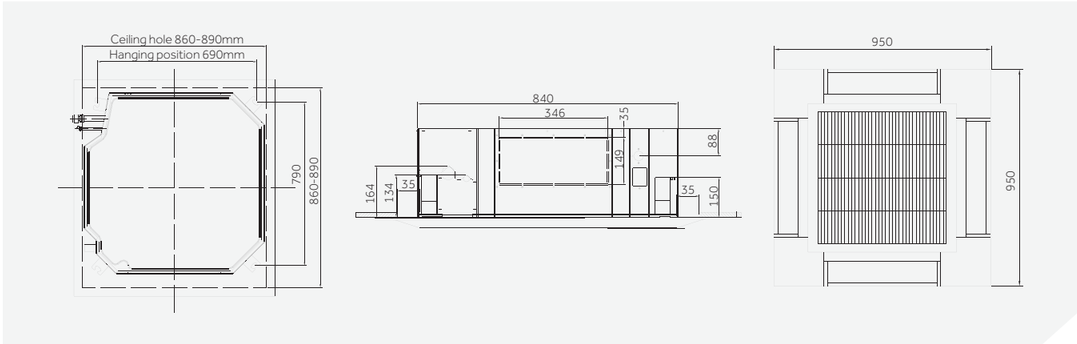

Convertible Type

AC12CS1ERA(S)/AC182CS1ERA(S)/AC242CS1ERA(S)

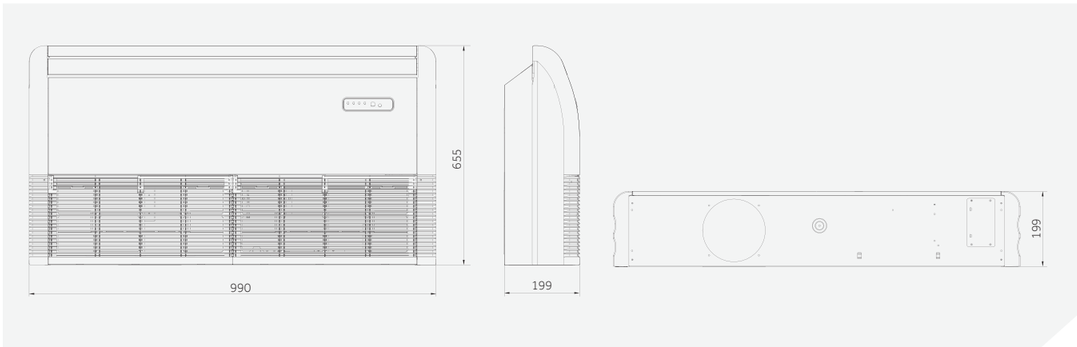

INDOOR PLATFORM

Convertible Type

AC28ES1ERA(S)/AC36ES1ERA(S)

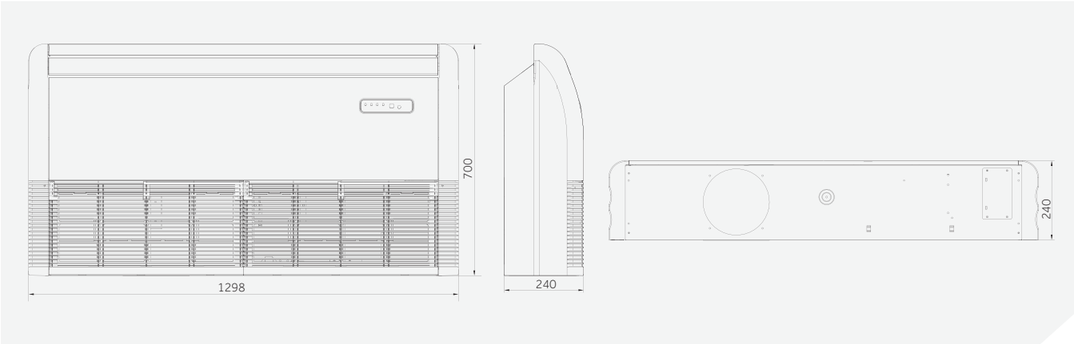

AC48FS1ERA(S)/AC60FS1ERA(S)

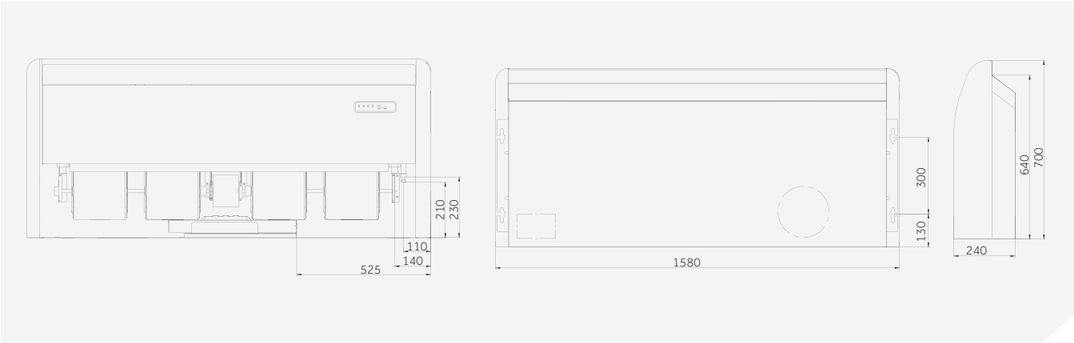

Slim Duct Type

AD09SS1ERA(N)/AD12SS1ERA(N)

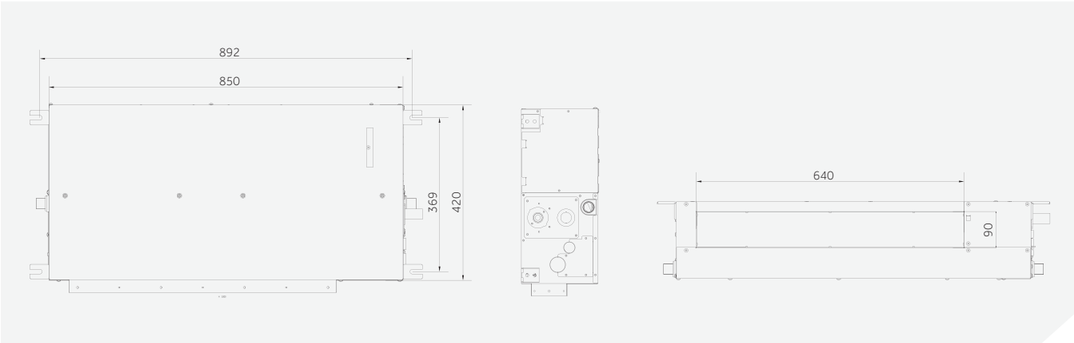

Slim Duct Type

AD18SS1ERA(N)/AD24SS1ERA(N)

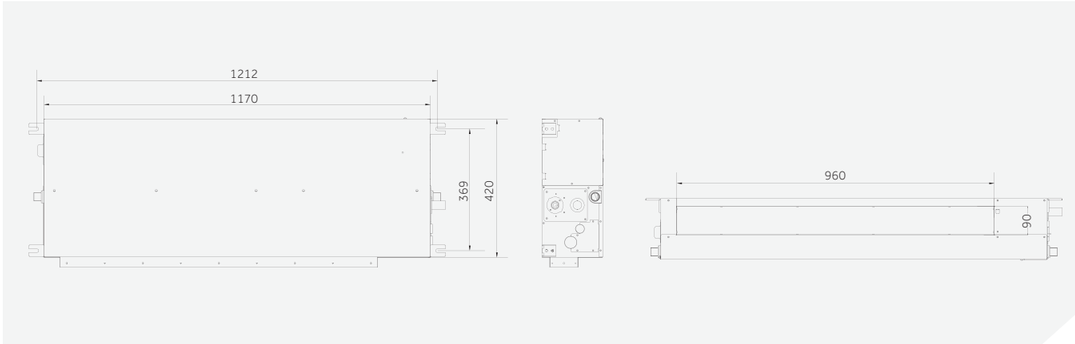

Low ESP Duct Type

AD09LS1ERA/AD12LS1ERA

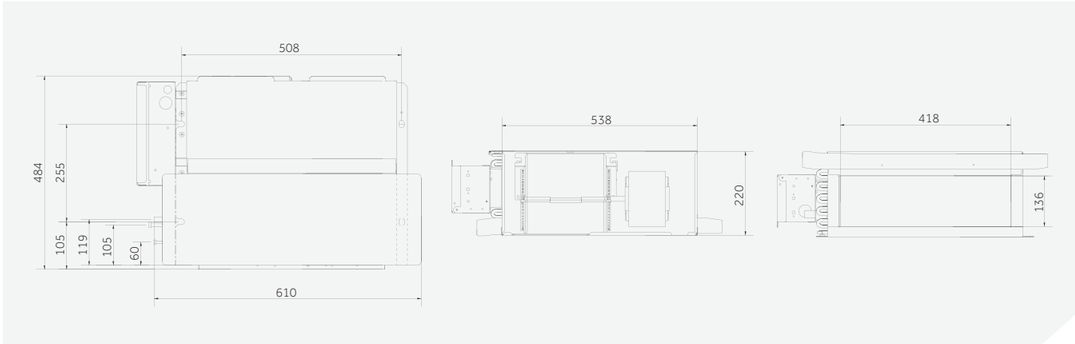

AD18LS1ERA/AD24LS1ERA

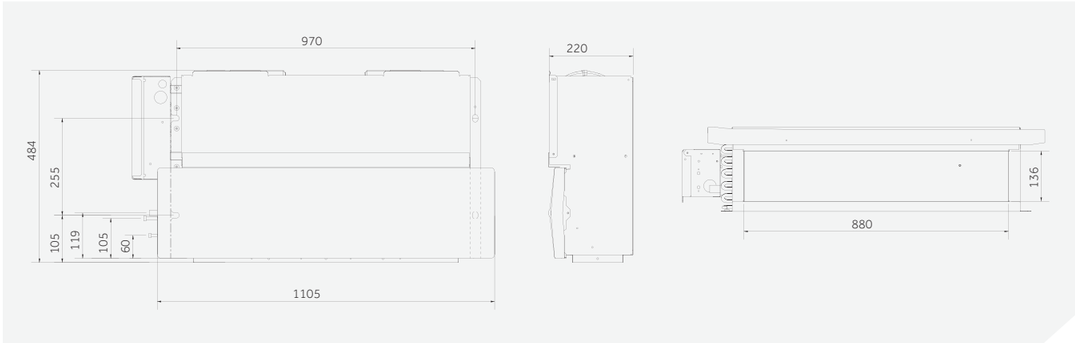

INDOOR PLATFORM

Medium ESP Duct Type

AD12MS1ERA

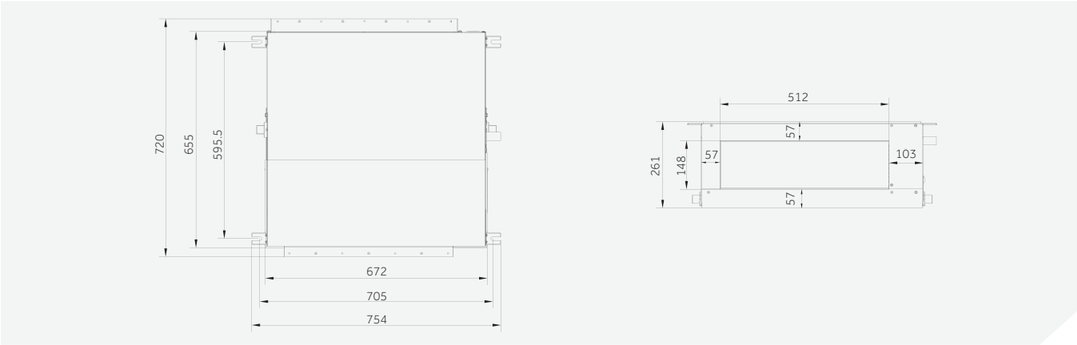

AD18MS1ERA/AD24MS2ERA/ADH071M1ERG/ADH090M1ERG

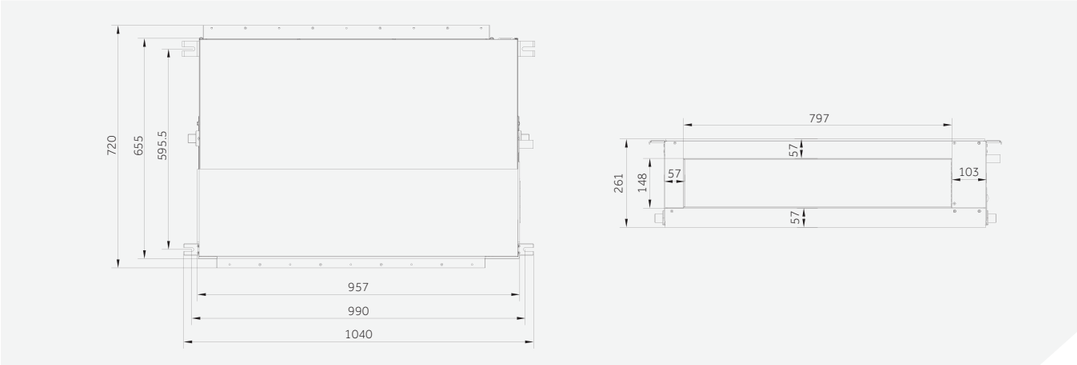

ADH105M1ERG/ADH125M1ERG/ADH140M1ERG

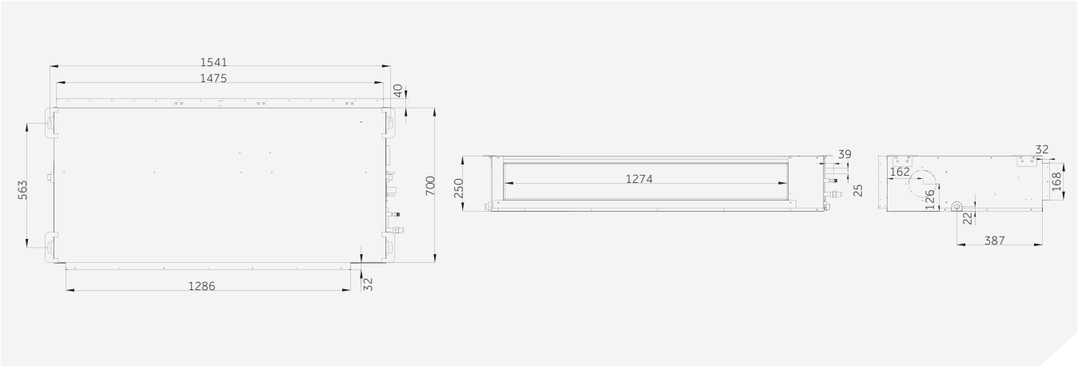

High ESP Duct Type

ADH105H1ERG/ADH125H1ERG/ADH140H1ERG

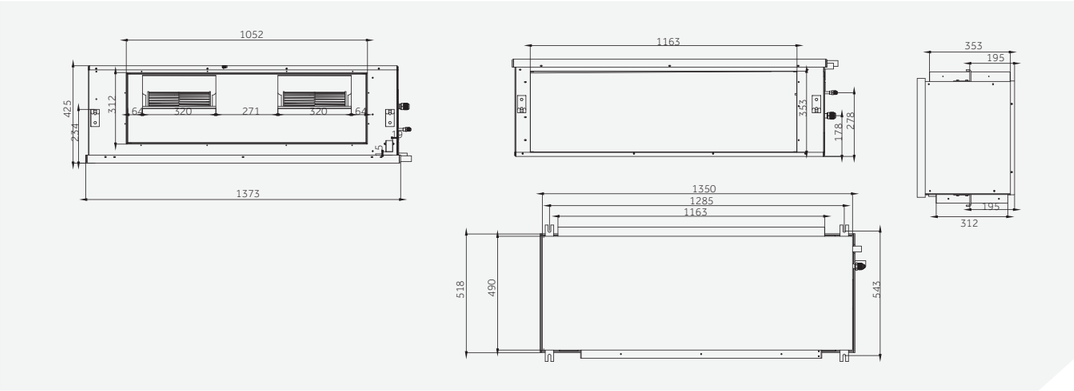

AD48HS1ERA(S)/AD60HS1ERA(S)

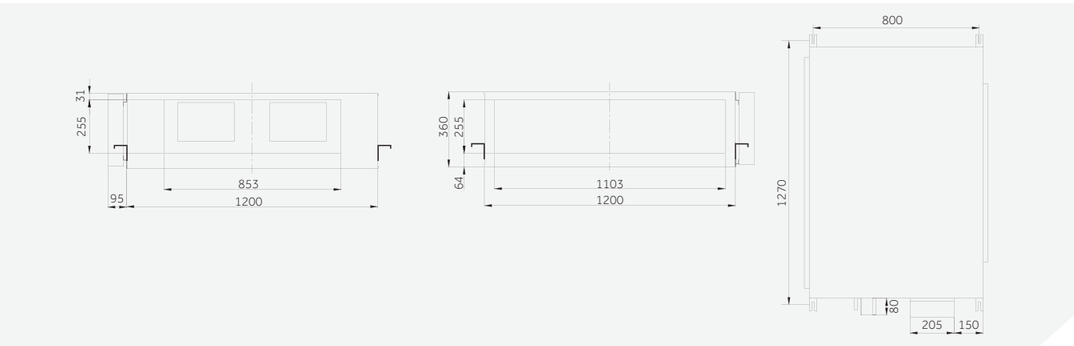

AD842AHEAA

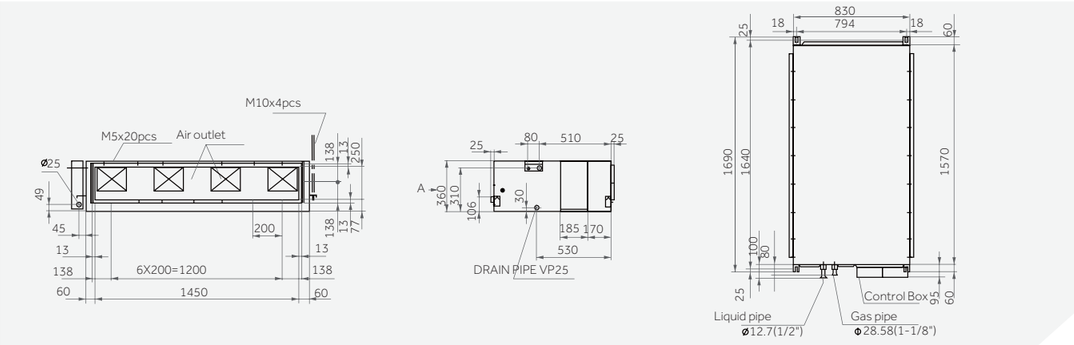

INDOOR PLATFORM

Cabinet Type

AP48DS1ERA(S)

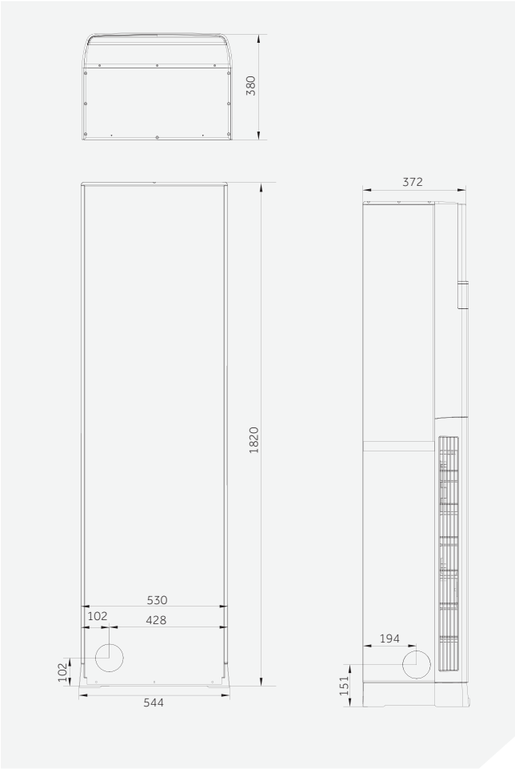

AP48KS1ERA(S)/AP60KS1ERA(S)

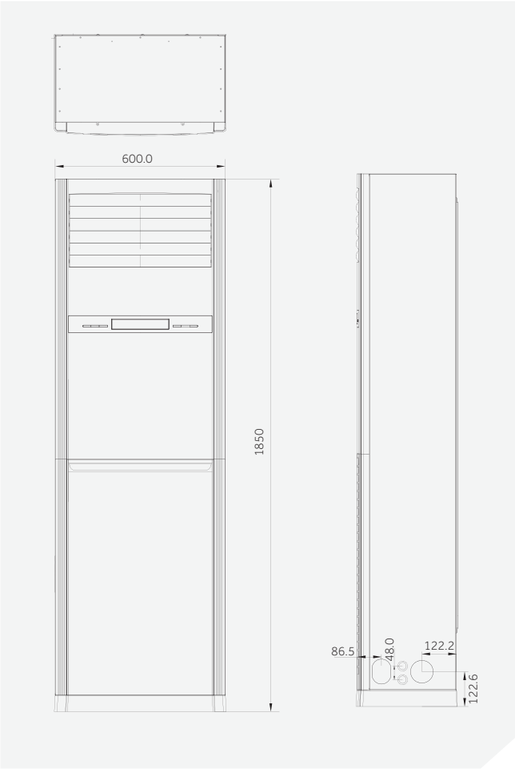

Nebula

AS07NS1HRA-WU/AS07NS1HRA-GU/AS09NS1HRA-WU/AS09NS1HRA-GU/
AS12NS1HRA-WU/AS12NS1HRA-GU

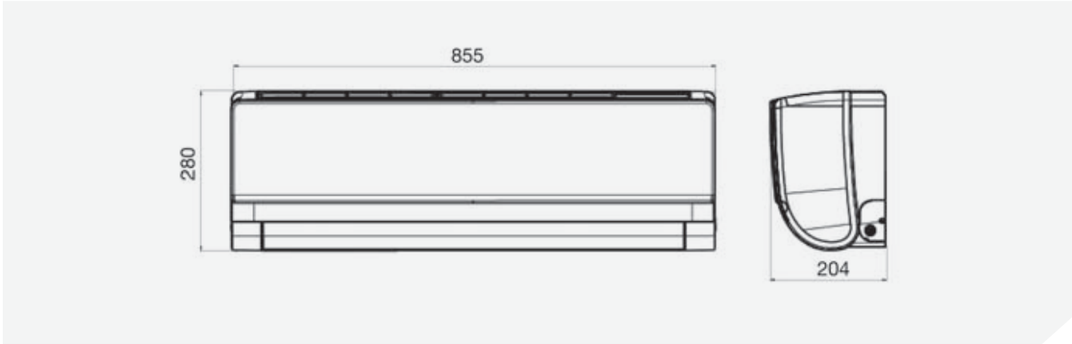

AS15NS1HRA-WU/AS15NS1HRA-GU

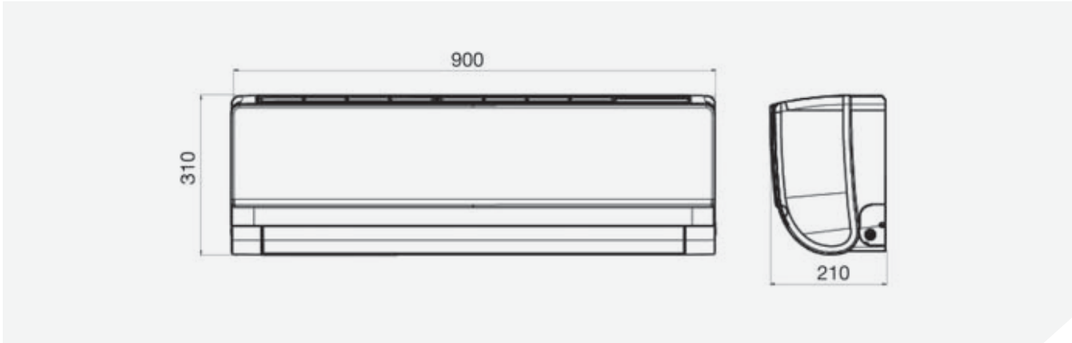

AS18NS1HRA-WU/AS18NS1HRA-GU

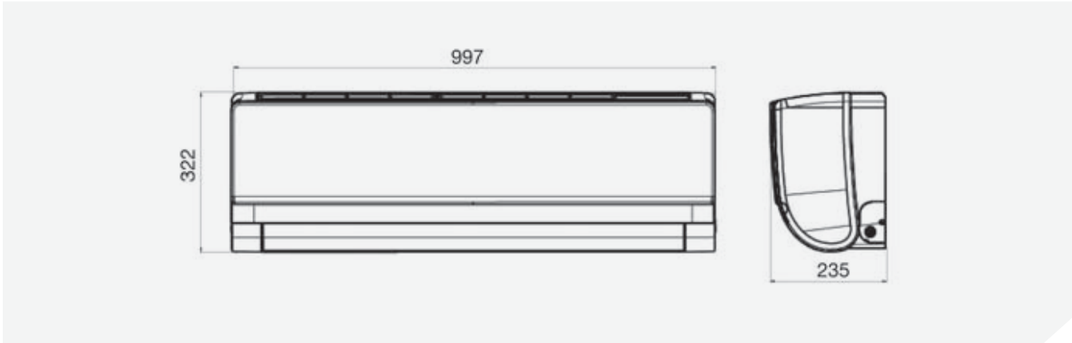

INDOOR PLATFORM

Nebula

AS24NS1HRA-WU/AS24NS1HRA-GU

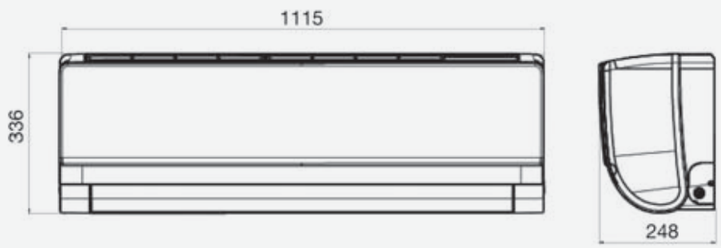

Breeza

AS07BS4HRA/AS09BS4HRA/AS12BS4HRA

AS15BS4HRA

Breeza

AS18BS4HRA

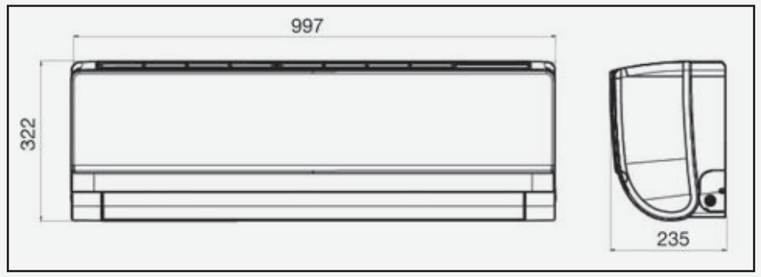

AS24BS4HRA

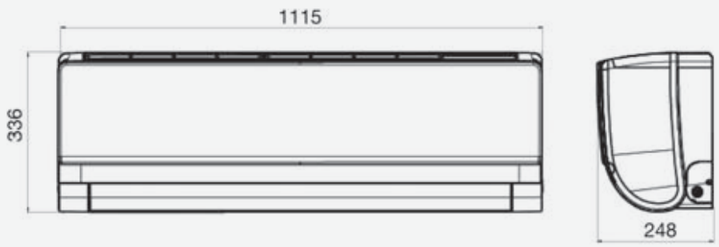

Console

AF09AS1ERA/AF12AS1ERA

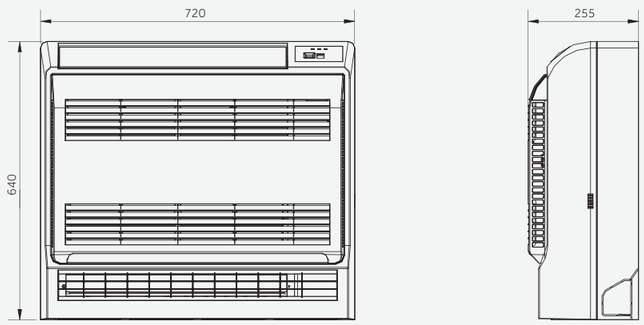

Haier